APPLICATION GUIDELINES

Copeland outdoor refrigeration units for A2L & A1 applications

ZXMY-020E to ZXMY-075E, ZXDY-030E to ZXDY-075E
ZXLY-020E to ZXLY-040E, ZXLY-050IE to ZXLY-075IE



COPELAND

Table of contents

About these guidelines 1
1 Safety instructions 1
1.1 Icon explanation 1
1.2 Safety statements 2
1.3 General safety instructions 2
2 Product description 3
2.1 General information about Copeland ZX*Y refrigeration units 3
2.2 EU Ecodesign Directive 2009/125/EC 3
2.3 Main product features and dimensions 4
2.4 Product nameplate 6
2.5 Nomenclature 6
2.6 Application range 7
2.6.1 Qualified refrigerants and oils 7
2.6.2 Application limits 7
2.6.3 PED category 7
2.7 BOM variations 8
2.8 P&I diagrams 8
2.8.1 ZXMY units 8
2.8.2 ZXDY units 9
2.8.3 ZXLY*E units with liquid injection 10
2.8.4 ZXLY*IE units with enhanced vapour injection (EVI) 11
2.9 Main components description 12
2.9.1 Compressor 12
2.9.2 Condenser fan(s) 12
2.9.3 Housing 12
2.10 XCM25D Electronic controller – Features 13
2.10.1 Description 13
2.10.2 Functionalities 13
2.10.3 Modbus communication 14
2.10.4 Main control & safety features 14
2.10.5 Additional features for customization 15
2.11 XCM25D Electronic controller – Programming 20
2.11.1 Programming the local display 20
2.11.2 Remote display CCM60 21

2.11.3 Single commands 21
2.11.4 Double commands – Entering programming level 1 "Pr1" 21
2.11.5 How to program the parameters (Pr1 and Pr2) 22
2.11.6 Entering programming level 2 "Pr2" 22
2.11.7 Fast access menu 23
2.12 XCM25D controller keyboard 23
2.12.1 How to lock the keyboard 23
2.12.2 How to unlock the keyboard 23
2.13 Parameters level 1 – Required settings 24
2.14 Digital operation 24
2.15 Pumpdown 25
2.15.1 External pumpdown without XCM25D integration (not available on ZXDY units) 25
2.15.2 Pumpdown by the unit controller (not available on ZXDY units) 25
2.15.3 Pumpdown with room thermostat (not available on ZXDY units) 26
2.15.4 Internal pumpdown with temperature sensor (case temperature) 27
2.16 Reset to factory settings – Copeland Controls Hot Key 28
2.16.1 How to save factory settings or user settings 28
2.16.2 Copeland Controls Hot Key for ZX*Y units with XCM25D controller 28
2.16.3 Location of the hot key plug connection on the XCM25D controller 28
2.16.4 How to program a hot key from the controller (upload) 28
2.16.5 How to program a controller using a hot key (download) 28
2.17 Troubleshooting – Alarm history 29
2.18 Compressor motor protection 29
2.19 System pressure protection 29
2.19.1 High-pressure safety switch 29
2.19.2 Pressure relief valve 30
2.19.3 Low pressure safety 30
2.20 Other inputs of the XCM25D controller 30
2.20.1 Customer-supplied control (room thermostat) 30
2.20.2 Case temperature controller 30
2.20.3 Ambient temperature sensor 30
2.21 Alarm output (DO5) of the XCM25D controller 30
3 Installation 31
3.1 Refrigeration unit handling 31
3.1.1 Transport and storage 31
3.1.2 Weights 31
3.2 Refrigeration piping connections 32

3.2.1 Refrigeration piping installation 32
3.2.2 Brazing recommendations 33
3.2.3 Brazing procedure 33
3.3 Electrical connection 34
3.3.1 Power supply connections 34
3.3.2 Maximum operating currents for cable selection 36
3.3.3 Electrical protection standard (protection class) 36
3.3.4 Terminal box 37
3.3.5 Low-pressure protection 37
3.3.6 Crankcase heater 37
3.3.7 Insulation material 37
3.3.8 Vibration 37
3.3.9 High-potential testing 38
3.3.10 Circuit breaker with overcurrent protection 38
3.4 Pressure relief valve (PRV) 39
3.4.1 Pressure relief valve minimum requirements 39
3.4.2 Pressure relief valve installation 39
3.5 Location & fixings 41
4 Start-up & operation 43
4.1 Strength-pressure test 43
4.2 System tightness test 43
4.3 Evacuation 43
4.4 Charging procedure 44
4.4.1 Refrigerant charging procedure 44
4.4.2 Oil charging procedure 45
4.4.3 Oil separator 45
4.5 Rotation direction of scroll compressors 45
4.6 Maximum compressor cycle 45
4.7 Checks before starting & during operation 45
4.8 Pressure fluctuations in case of digital unit 46
4.9 Pumpdown cycle 46
5 Maintenance & repair 47
5.1 General considerations 47
5.2 Qualification of workers 47
5.3 Preparation and work procedure 47
5.4 Disassembling system components 48
5.5 Replacing a compressor 48
5.6 Exchanging the refrigerant 49

5.7 Replacing the crankcase heater 49
5.8 Electrical terminations 50
5.9 Condenser fins 50
5.10 Routine leak testing 50
5.11 Condenser fans & motors 51
6 Certification & approval 52
7 Dismantling & disposal 52
Appendix 1: Overview of the ZX*Y unit components 53
Appendix 2: Wiring diagram – ZXMY & ZXLY*E standard units (380-420 V / 3 Ph / 50 Hz) 54
Appendix 3: Wiring diagram – ZXLY*IE (EVI) units (380-420 V / 3 Ph / 50 Hz) 55
Appendix 4: Wiring diagram – ZXDY units (380-420 V / 3 Ph / 50 Hz) 56
Appendix 5: Parameters level 1 57
Appendix 6: Alarm menu 58
Appendix 7: Additional features for customization 62
Appendix 8: Temperature / resistance curve for B7 Sensor (customer option) 66
Appendix 9: List of tables and figures 67

About these guidelines

The purpose of these application guidelines is to provide guidance in the application of Copeland ZX*Y outdoor refrigeration units. They are intended to answer the questions raised while designing, assembling and operating a system with these products.

Besides the support they provide, the instructions listed herein are also critical for the proper and safe functioning of the refrigeration units. The performance and reliability of the product may be impacted if it is not used according to these guidelines or is misused.

These application guidelines cover stationary applications only. For mobile applications, contact Application Engineering as other considerations may apply.

1 Safety instructions

Copeland refrigeration units are manufactured according to the latest European safety standards. Particular emphasis has been placed on the user's safety.

The ZX*Y outdoor refrigeration units are intended for installation in machines and systems in accordance with the following directives and regulations:

Machinery Directive MD 2006/42/EC	Supply of Machinery (Safety) Regulations 2008
Pressure Equipment Directive PED 2014/68/EU	Pressure Equipment (Safety) Regulations 2016
Low Voltage Directive LVD 2014/35/EU	Electrical Equipment (Safety) Regulations 2016
Electromagnetic Compatibility Directive EMC 2014/30/EU	Electromagnetic Compatibility Regulations 2016
Ecodesign Directive 2009/125/EC	Ecodesign for Energy-Related Products Regulations 2010

They may be put to service only if they have been installed in systems according to instructions and conform to the corresponding provisions of legislation. For relevant standards please refer to the Manufacturer's Declaration, available at www.copeland.com/en-gb.

***NOTE:* Only dedicated compressors and refrigeration units are allowed to be used with flammable refrigerants. Copeland marks all compressors and units that are qualified for flammable refrigerants with a sticker indicating the usage of such refrigerants. Systems using flammable refrigerants must be executed correctly while observing safety rules, as specified in corresponding safety standards such as, but not limited to EN 378. They must comply with any and all applicable legislation and regulations. Ensuring compliance remains the user's responsibility.**

These instructions should be retained throughout the lifetime of both the compressor and the refrigeration unit.

You are strongly advised to follow these safety instructions.

1.1 Icon explanation

	**WARNING** This icon indicates instructions to avoid personal injury and material damage.		**Danger of explosive atmosphere** This icon indicates a risk of explosive atmosphere.
	**High voltage** This icon indicates operations with a danger of electric shock.		**Fire hazard** This icon indicates a risk of flammable atmosphere.
	**Danger of burning** This icon indicates operations with a danger of burning.		**CAUTION** This icon indicates instructions to avoid property damage and possible personal injury.
	**Danger of frostbite** This icon indicates operations with a danger of frostbite.		**IMPORTANT** This icon indicates instructions to avoid malfunction of the compressor.
	**Explosion hazard** This icon indicates operations with a danger of explosion.	***NOTE***	This word indicates a recommendation for easier operation.

1.2 Safety statements

- **Refrigerant compressors and refrigeration units must be employed only for their intended use. The system has to be labelled according to the applicable standards and legislation.**
- **Only qualified and authorized RACHP (refrigeration, air conditioning and heat pump) personnel are permitted to install, commission and maintain this equipment.**
- **Electrical connections must be made by qualified electrical personnel.**
- **All valid standards for connecting electrical and refrigeration equipment must be observed.**
- **The national legislation and regulations regarding personnel protection must be observed.**

Additional requirements and statements for A2L refrigerant systems:

- **Only competent personnel (as specified in EN 13313) qualified for flammable refrigerant handling are permitted to commission, initiate and maintain the compressor/refrigeration system; non-trained personnel, including the user, are not allowed to do so and must call on an expert.**
- **The maximum refrigerant charge is specified in standards such as, but not limited to EN 378, EN 60335-2-40 and EN 60335-2-89. The system designer shall implement all safety measures defined by the applicable standards and the maximum refrigerant charge shall not be exceeded.**
- **The system designer must carefully evaluate the risk of external fire. If necessary, a pressure relief valve should be installed to avoid excessive pressure due to external fire. Follow the instructions given in section 3.4 "Pressure relief valve (PRV)" for pressure relief valve selection and installation.**
- **If a flammable atmosphere is detected, immediately take all necessary precautions to mitigate the risk as determined in the risk assessment.**



Use personal safety equipment. Safety goggles, gloves, protective clothing, safety boots and hard hats should be worn where necessary.

1.3 General safety instructions



WARNING
Pressurized system! Serious personal injuries and/or system breakdown! Accidental system start before complete set-up must be avoided. Never install a system in the field and leave it unattended when it has no charge, when it has a holding charge, or with the service valves closed, without locking out the system electrically.
System breakdown! Personal injuries! Only approved refrigerants and refrigerant oils must be used.



WARNING
High shell temperature! Burning! Do not touch the compressor or piping until they have cooled down. Ensure that other materials in the area of the compressor do not come into contact with it. Mark and secure accessible sections.



CAUTION
Overheating! Bearing damage! Do not operate compressors without refrigerant charge or without being connected to the system.



CAUTION
Contact with refrigerant oil! Material damage! Polyolester oil (POE) must be handled carefully and the proper protective equipment (gloves, eye protection, etc.) must be used at all times. POE must not come into contact with any surface or material that it might damage, including without limitation, certain polymers, eg, PVC/CPVC and polycarbonate.



IMPORTANT
Transit damage! Unit malfunction! Use original packaging. Avoid collisions and tilting.



IMPORTANT
This appliance is not designed to be accessible to the general public according to IEC 60335-2-40.

The contractor is responsible for the installation of the unit and should check the following points:

- sufficient liquid sub-cooling in the line to the expansion valve(s) to avoid "flash-gas" in the liquid line;
- sufficient amount of oil in the compressor (in case of long piping additional oil must be charged).

2 Product description

2.1 General information about Copeland ZX*Y refrigeration units

Copeland has developed the ZX*Y outdoor refrigeration units to meet primarily the demands of the food retail and food service sectors. It is an air-cooled refrigeration unit that uses the latest Copeland patented scroll technology as the main driver and has electronic protection and diagnostics features built in the compact chassis. The combination of large condensers and low-speed fans allows for particularly quiet operation.



2.2 EU Ecodesign Directive 2009/125/EC

The European Directive 2009/125/EC with regard to Ecodesign requirements for professional refrigerated storage cabinets, blast cabinets, refrigeration units and process chillers requires manufacturers to decrease the energy consumption of their products by establishing minimum energy efficiency standards. Copeland refrigeration units are prepared and optimized to meet the requirements of the Ecodesign Directive. The integrated variable speed fan and condenser reduce the noise level and energy consumption significantly. This, combined with Copeland scroll technology, allows for high-efficiency operation.

For the rated cooling capacity, rated power input and rated COP value please refer to Copeland Select software at www.copeland.com/en-gb/tools-resources.

These guidelines meet the requirements of Regulation 2015/1095, Annex V, section 2(a), with regard to product information, namely:

- (v) ➔ See chapter 2.6 "Application range"
- (vi) ➔ See chapters 5.9 "Condenser fins" and 5.10 "Routine leak testing"
- (vii) ➔ See chapters 2.10.4 "Main control & safety features" and 4.4 "Charging procedure"
- (viii) ➔ See chapter 7 "Dismantling & disposal"

2.3 Main product features and dimensions

Copeland ZX*Y refrigeration units are released for multiple refrigerants. They are available in two cabinet sizes and are equipped with one or two fans. Depending on the compressor in use these units are designed for medium- temperature or low-temperature refrigeration applications.

Unit	Refrigerant	Displacement @ 50 Hz (m^3/h)	Cooling capacity* (kW)	Nominal power (kW)	Rated current (A)	PS (bar)	
						High side	Low side
Medium temperature standard units							
ZXMY-020E	R454A, R454C, R455A, R1234yf, R513A, R134a, R448A, R449A, R404A, R450A, R507A, R407A, R407C, R407F	5.76	3.05	1.39	5.21	31	22
ZXMY-030E		8.00	4.23	1.84	6.51		
ZXMY-040E		11.40	5.94	2.64	8.81		
ZXMY-050E		14.30	7.53	3.26	11.62		
ZXMY-060E		16.70	8.77	3.85	13.32		
ZXMY-075E		21.40	10.90	4.99	17.42		21
Medium temperature digital units							
ZXDY-030E	R454A, R454C, R455A, R1234yf, R513A, R134a, R448A, R449A, R404A, R450A, R507A, R407A, R407C, R407F	8.81	4.55	2.08	7.71	31	22
ZXDY-040E		11.40	6.10	2.67	11.52		
ZXDY-050E		14.40	7.56	3.29	12.82		
ZXDY-060E		17.10	8.92	3.94	13.82		
ZXDY-075E		21.40	11.00	4.92	17.42		21
Low temperature standard units (without EVI)							
ZXLY-020E	R454A, R454C, R455A, R448A, R449A	5.92	1.04	0.98	6.20	31	21
ZXLY-030E		8.03	1.40	1.36	7.20		
ZXLY-040E		11.75	2.01	1.99	9.20		
Low temperature EVI units							
ZXLY-050IE	R454A	11.75	3.38	3.09	5.98	31	21
	R454C	17.06	2.67	2.63	5.47		
	R455A	21.39	2.78	3.10	6.01		
ZXLY-060IE	R454A	11.75	4.84	4.26	7.56		
	R454C	17.06	4.03	3.50	6.63		
	R455A	21.39	4.23	4.17	7.39		
ZXLY-075IE	R454A	11.75	5.58	5.60	9.43		
	R454C	17.06	4.95	4.16	7.49		
	R455A	21.39	4.84	5.38	8.91		

** Conditions for ZX*Y using R454C: evaporating temp = -10 °C (-35 °C for ZXLY), ambient temp = 32 °C, suction temp = 20 °C.*

Table 1: ZX*Y refrigeration units technical data

Unit	Outer dimensions length/width/height with closed cover (mm)	Net weight (kg)	Number of fans	Liquid receiver size (litres)
Medium temperature standard units				
ZXMY-020E	424 / 1027 / 840	73	1	3.9
ZXMY-030E		80		
ZXMY-040E		86		
ZXMY-050E	424 / 1029 / 1244	112	2	5.9
ZXMY-060E		114		
ZXMY-075E		116		
Medium temperature digital units				
ZXDY-030E	424 / 1027 / 840	85	1	3.9
ZXDY-040E	424 / 1029 / 1244	106	2	5.9
ZXDY-050E		118		
ZXDY-060E		120		
ZXDY-075E		122		
Low temperature standard units (without EVI)				
ZXLY-020E	424 / 1027 / 840	78	1	3.9
ZXLY-030E		81		
ZXLY-040E		93		
Low temperature EVI units				
ZXLY-050IE	424 / 1027 / 840	101	1	3.9
ZXLY-060IE	424 / 1029 / 1244	129	2	5.9
ZXLY-075IE		134		

Table 2: ZX*Y refrigeration units features

The figures hereafter show the overall physical dimensions of the ZX*Y refrigeration units in millimetres:

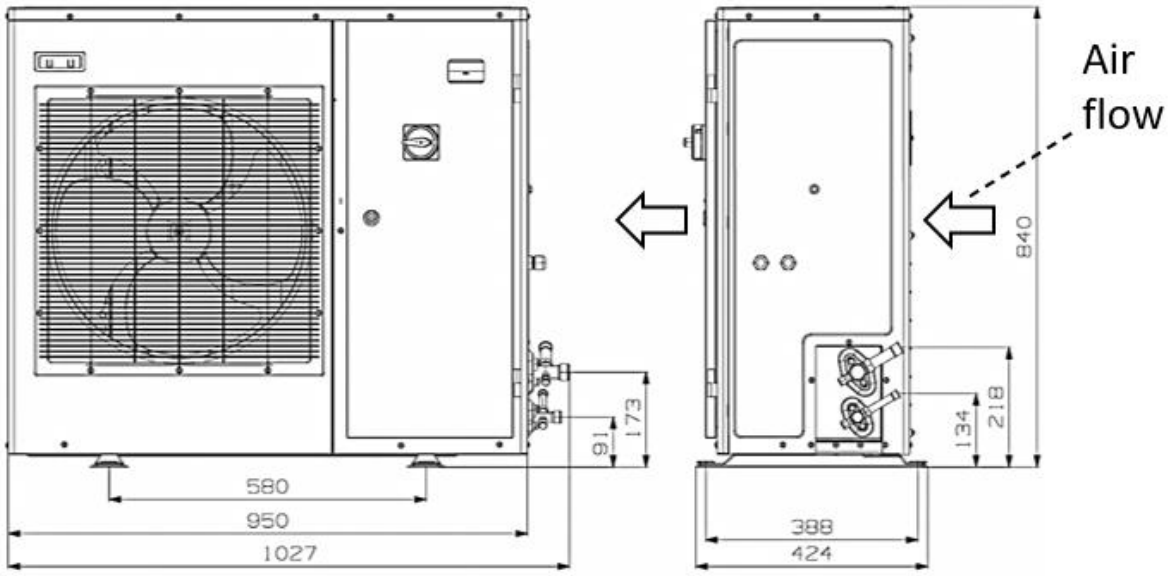

Figure 1: Dimensions of models ZXMY-020E to ZXMY-040E, ZXDY-030E, ZXLY-020E to ZXLY-040E and ZXLY-050IE (single-fan units)

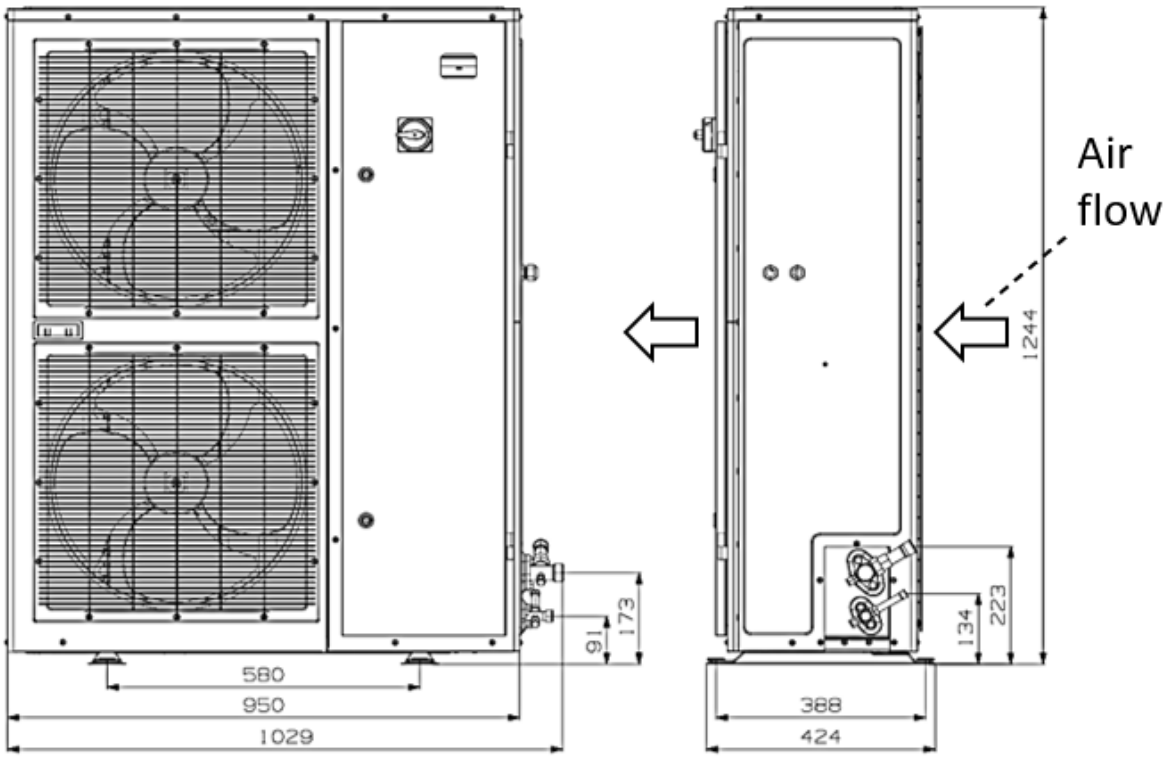

Figure 2: Dimensions of models ZXMY-050E to ZXMY-075E, ZXDY-040E to ZXDY-075E, ZXLY-060IE & ZXLY-075IE (dual-fan units)

2.4 Product nameplate

The refrigeration unit nameplate shows model designation and serial number, as well as locked rotor amps, maximum rated current, safety pressures and weight.

The compressor has its own nameplate with all electrical characteristics.

2.5 Nomenclature

The model designation contains the following technical information about the refrigeration unit:

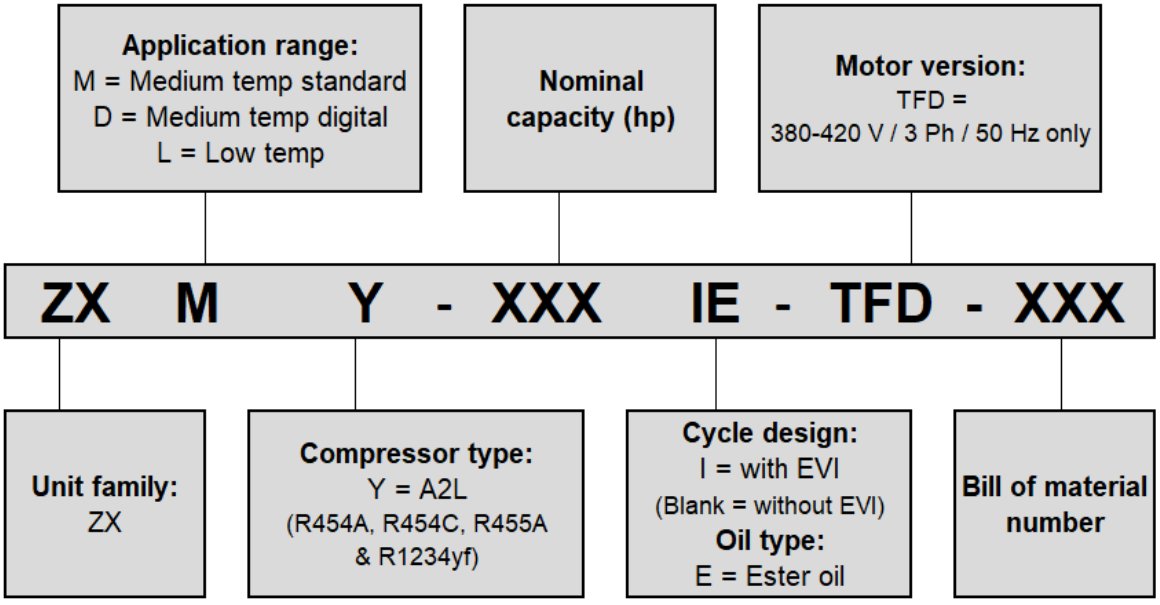

Figure 3: Nomenclature ZX*Y units

2.6 Application range

2.6.1 Qualified refrigerants and oils

Qualified refrigerants	R454A, R454C, R455A, R1234yf*, R513A*, R134a*, R448A*, R449A*, R404A*, R450A*, R507A*, R407C*, R407A*, R407F* (* = not for ZXLY)							
Qualified servicing oils	Emkarate RL32 3MAF Mobil EAL Arctic 22CC							
Units	ZXMY-020E	ZXMY-030E ZXDY-030E	ZXDY-040E	ZXLY-020E	ZXLY-030E	ZXDY-050E ZXDY-060E ZXDY-075E	ZXMY-040E ZXMY-050E ZXMY-060E ZXMY-075E	ZXLY-040E ZXLY-050IE ZXLY-060IE ZXLY-075IE
Oil charge (litres)	1	1.1	1.24	1.30	1.51	1.77	1.85	1.89

Table 3: Qualified refrigerants and oils

***NOTE:* R454A, R454C, R455A and R1234yf are classified as A2L (mildly flammable) refrigerants.**

***NOTE:* R513A, R134a, R448A, R449A, R404A, R450A, R507A, R407C, R407A and R407F are classified as A1 refrigerants. In order to apply these refrigerants, the approval of the Application Engineering department at Copeland is required.**

***NOTE:* Some unit models are equipped with an oil separator – see section 2.7 "BOM variations". The separator is pre-charged with 0.5 litre of oil.**

2.6.2 Application limits

For application envelopes, please refer to the compressor application envelopes which can be found in Copeland Select software, available at www.copeland.com/en-gb.

ZX*Y refrigeration units can be used at ambient temperatures from -15 to 45 °C. For lower ambient temperatures please contact your local Application Engineering representative.

2.6.3 PED category

The nameplate of the unit contains information about the maximum allowable pressure PS, the minimum and maximum allowed temperatures TS, the internal free volume and the fluid groups of the refrigerants qualified for the unit model range. Values are given for both pressure ranges on low- and high-pressure sides.

The PED category is assigned according to the Pressure Equipment Directive PED 2014/68/EU. Requirements apply to the relevant pressure levels in the unit when the product of "pressure relative to the environment" by "related internal free volume" (PxV) exceeds a given limit. When calculating the PED category, the high- and low-pressure sides have to be calculated separately. The highest of the calculation results is considered..

The PED category also depends on the fluid group of the qualified refrigerants. A distinction is made between refrigerants of fluid group 1 (flammable) and fluid group 2 (non-flammable). ZX*Y refrigeration units can be operated with both A1 (fluid group 2) and A2L (fluid group 1) refrigerants. As a result, identical unit models may be subject to different PED categories depending on the refrigerant used.

Refrigeration unit range	Refrigerant	Fluid group	PED class
ZX*Y	R454A, R454C, R455A, R1234yf	1	II
	R513A, R134a, R448A, R449A, R404A, R450A, R507A, R407C, R407A, R407F	2	I

Table 4: PED category based on refrigerant used

2.7 BOM variations

The BOM (Bill-Of-Material) number at the end of the unit designation indicates the different unit layouts and details. The ZX*Y units covered in these guidelines are available in the following BOM versions:

BOM	Family	Introduction date	Controller concept	Oil separator	Suction accumulator	EVI
304	ZXMY-020E to ZXMY-075E	10/2020	XCM25D (Copeland Controls)	No	No	No
454	ZXDY-030E to ZXDY-075E	10/2020		Yes	No	No
	ZXLY-020E to ZXLY-040E	09/2021		Yes	Yes	No
600	ZXLY-050IE to ZXLY-075IE	06/2025		Yes	Yes	Yes
611	ZXLY-050IE to ZXLY-075IE	06/2025		Yes	Yes	Yes

Table 5: BOM variations

2.8 P&I diagrams

2.8.1 ZXMY units

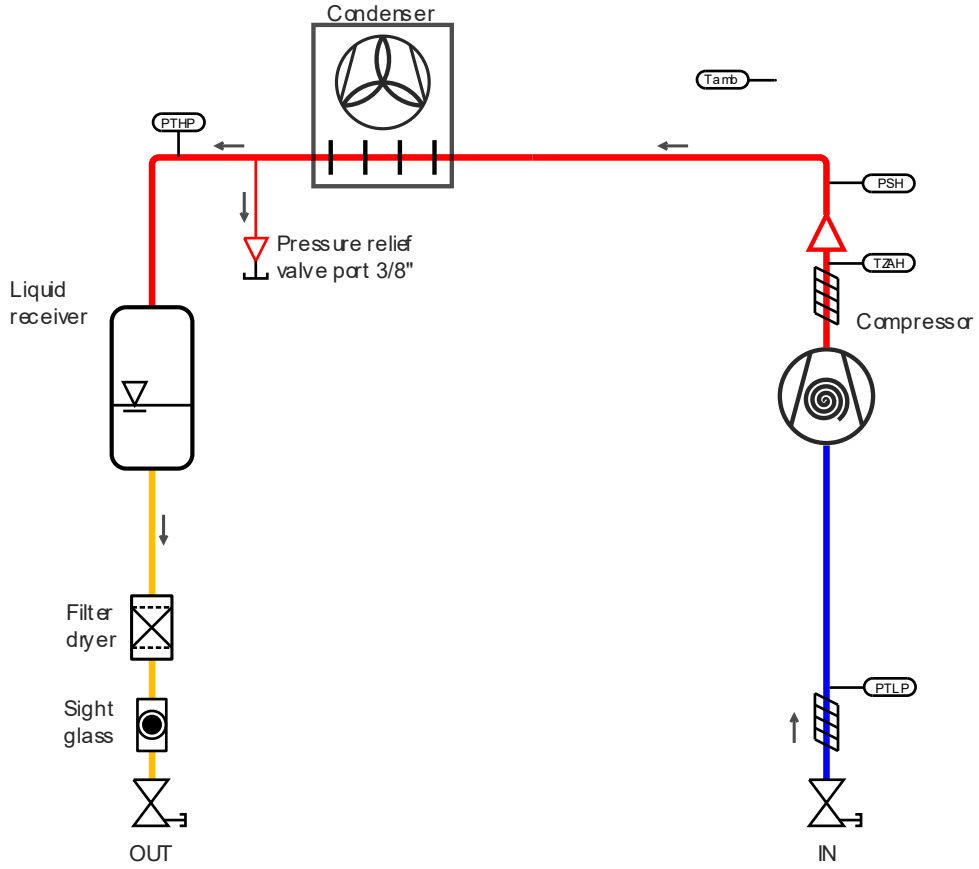

Figure 4: P&I diagram for ZXMY units

Position	Description	Comments	Fast access menu
PT LP	Suction pressure transducer	Compressor setpoint	P1P
PT HP	Pressure transducer, high pressure	Fan speed control	P2P
PSH	High pressure limiter	System safety	
TZAH	Discharge temperature sensor	Compressor safety	P3t
T_{amb}	Ambient temperature sensor	Additional functions	P6t

Table 6: Sensors & transmitters on P&I diagrams for ZXMY units

2.8.2 ZXDY units

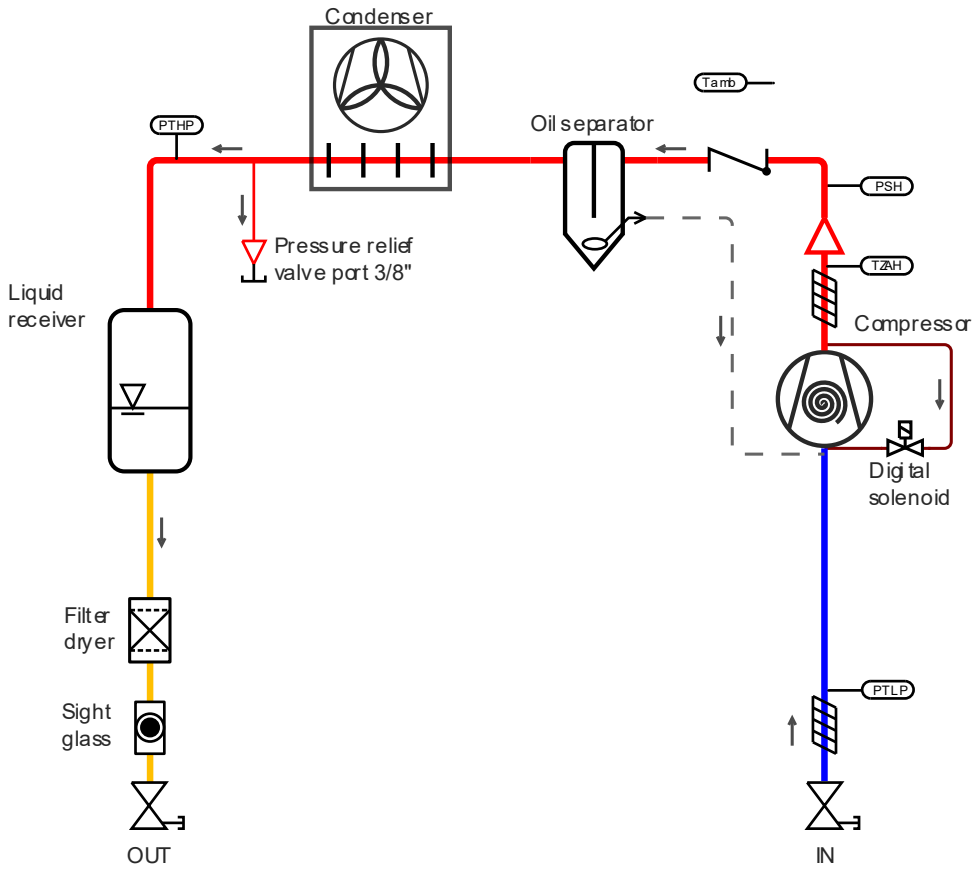

Figure 5: P&I diagram for ZXDY units

Position	Description	Comments	Fast access menu
PT LP	Suction pressure transducer	Compressor setpoint	P1P
PT HP	Pressure transducer, high pressure	Fan speed control	P2P
PSH	High pressure limiter	System safety	
TZAH	Discharge temperature sensor	Compressor safety	P3t
T_{amb}	Ambient temperature sensor	Additional functions	P6t

Table 7: Sensors & transmitters on P&I diagrams for ZXDY units

2.8.3 ZXLY*E units with liquid injection

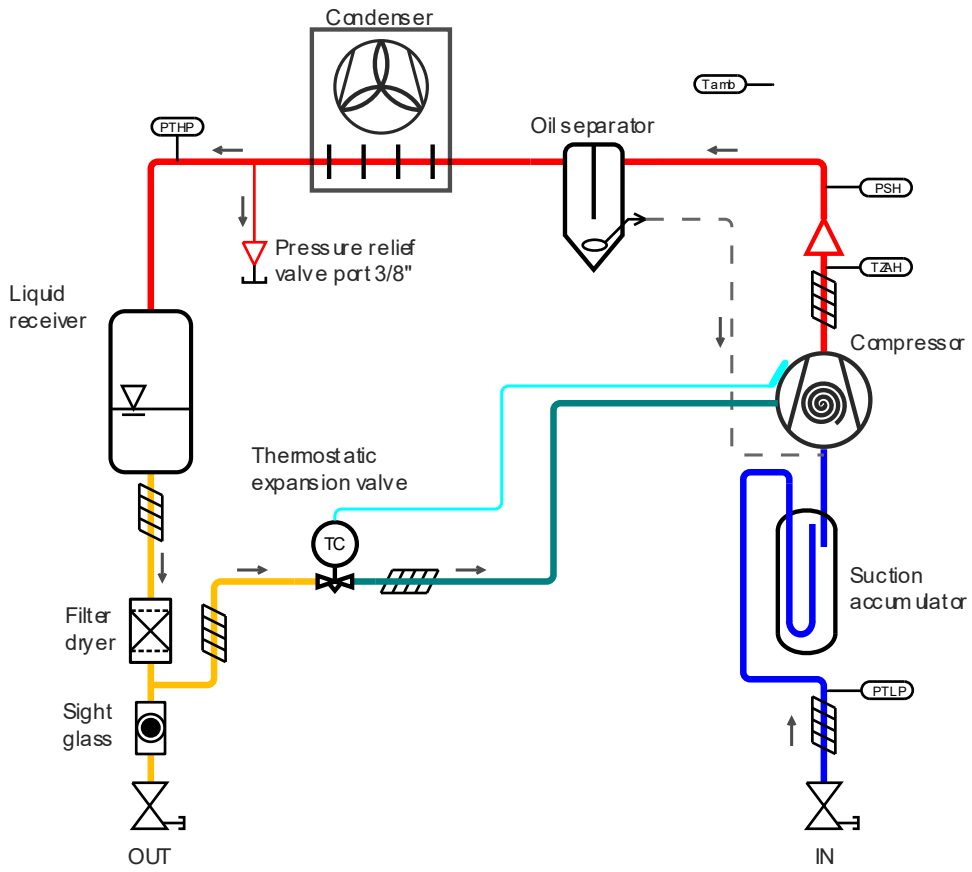

Figure 6: P&I diagram for ZXLY*E units

Position	Description	Comments	Fast access menu
PT LP	Suction pressure transducer	Compressor setpoint	P1P
PT HP	Pressure transducer, high pressure	Fan speed control	P2P
PSH	High pressure limiter	System safety	
TZAH	Discharge temperature sensor	Compressor safety	P3t
T_{amb}	Ambient temperature sensor	Additional functions	P6t

Table 8: Sensors & transmitters on P&I diagrams for ZXLY*E units

2.8.4 ZXLY*IE units with enhanced vapour injection (EVI)

IMPORTANT
Absence of insulation on the liquid line in ZXLY*IE units! Air moisture condensation and lack of performance! Moisture will condensate on the liquid line and cause water droplets. The liquid line can pick up additional heat from the ambient which will adversely affect the subcooling desirable for the liquid refrigerant before it enters the expansion valve. Both the suction and liquid interconnecting piping between the unit and the evaporator should be insulated to avoid condensation.

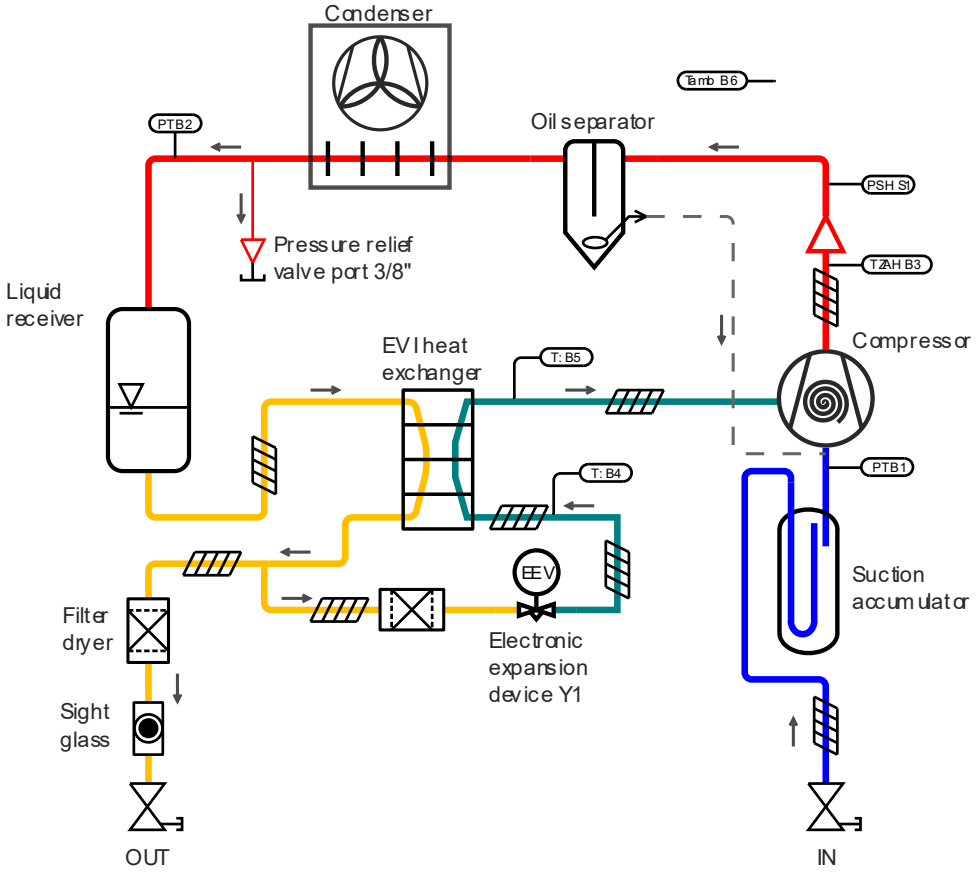

Figure 7: P&I diagram for ZXLY*IE units

Position	Description	Comments	Fast access menu
PT LP	Suction pressure transducer	Compressor setpoint	P1P
PT HP	Pressure transducer, high pressure	Fan speed control	P2P
PSH	High pressure limiter	System safety	
TZAH	Discharge temperature sensor	Compressor safety	P3t
T_{amb}	Ambient temperature sensor	Additional functions	P6t
T: B4	Temperature sensor EVI vapour IN	EVI superheat control	
T: B5	Temperature sensor EVI vapour OUT	EVI superheat control	

Table 9: Sensors & transmitters on P&I diagrams for ZXLY*IE units

2.9 Main components description

2.9.1 Compressor

Medium temperature standard		Medium temperature digital	
Unit model	**Compressor model**	**Unit model**	**Compressor model**
ZXMY-020E	YB12K1E-TFD	-	-
ZXMY-030E	YB17K1E-TFD	ZXDY-030E	YBD17K1E-TFD
ZXMY-040E	YB24K1E-TFD	ZXDY-040E	YBD24K1E-TFD
ZXMY-050E	YB31K1E-TFD	ZXDY-050E	YBD31K1E-TFD
ZXMY-060E	YB36K1E-TFD	ZXDY-060E	YBD36K1E-TFD
ZXMY-075E	YB45K1E-TFD	ZXDY-075E	YBD45K1E-TFD
Low temperature without EVI		**Low temperature with EVI**	
Unit model	**Compressor model**	**Unit model**	**Compressor model**
ZXLY-020E	YF05K1E-TFD	ZXLY-050IE	YFI10K1E-TFD
ZXLY-030E	YF07K1E-TFD	ZXLY-060IE	YFI15K1E-TFD
ZXLY-040E	YF10K1E-TFD	ZXLY-075IE	YFI19K1E-TFD

Table 10: Compressor models cross reference

2.9.2 Condenser fan(s)

The condensers of the ZX*Y refrigeration units are equipped with single-phase fans.

Refrigeration units		Number of fans	Fan speed	Diameter	Voltage	Power input
Medium temp.	ZXMY-020E to ZXMY-040E ZXDY-030E	1	830 rpm	450 mm	380 - 420 V 1 Ph 50 Hz	115 W
	ZXMY-050E to ZXMY-075E ZXDY-040E to ZXDY-075E	2				230 W
Low temp.	ZXLY-020E to ZXLY-040E ZXLY-050IE	1	830 rpm	450 mm	380 - 420 V 1 Ph 50 Hz	115 W
	ZXLY-060IE & ZXLY-075IE	2				230 W

Table 11: Condenser fans technical data

2.9.3 Housing

ZX*Y refrigeration units have specific housing features:

- Controller-window in the cabinet door. The window is IP54. It shows the current value of the electronic controller.
- The main power switch is installed on the cabinet door and allows to de-energize the unit without opening the door. To open the door the main power switch must be in the off position.
- The quick-locks allow for easy and quick opening of the cabinet door by means of the cabinet key.
- The cabinet key is delivered with the unit. It is attached to one of the piping connections by means of a cable strap.

The housing is designed to withstand a 300-hour salt spray test according to ASTM B-117, ASTM D-1654 and ČS 92 7.



Figure 8: ZX*Y unit housing

NOTE: **For detailed information about unit components and spare parts, please refer to the compressor application guidelines and to the Copeland Spare Parts& Accessories Catalogue available at www.copeland.com/en-gb.**

2.10 XCM25D Electronic controller – Features

The XCM25D electronic controller from Copeland Controls is designed to be a powerful, flexible controller for use in multiple applications. It has been developed for refrigeration units and allows the adjustment of all relevant parameters by the user.



Figure 9: XCM25D Electronic controller

2.10.1 Description

WARNING
Electrical pins under voltage! Electrical shock hazard! There are unused fast-on pins (C1 & DO2) on the XCM25D which could be under voltage. They are covered by insulated fast-on flags in the factory. Handle carefully when removing insulating flags during service on site.

The controller is designed for usage in an outdoor refrigeration unit. It is rated to be used in the following environment:

- Outdoor ambient temperature for controller operation: -40 to +60 °C
- Ambient temperature for storage: -40 to +80 °C
- Maximum humidity: 90 % at 48 °C (non-condensing)
- Board power: 24 VAC +15 % / -20 %
- Voltage sensing capabilities: three-phase 200-240, 380-460, 575 VAC ± 10 %

The units of measure are selectable. The factory default unit is bar (always considered relative) for pressure and °C for temperature.

2.10.2 Functionalities

The controller allows for easy commissioning by the technician with the factory settings at the highest program level. It also offers the possibility to make substantial changes to the system optimization in further programming levels. Advanced functionalities can also be activated.

The following functions are covered by the controller:

- refrigeration unit control;
- case control;
- condenser fan control;
- defrost;
- voltage and current sensing (compressor protection);
- liquid and vapour injection
- system EXV control;
- digital compressor control;
- Modbus/Canbus communication.

***NOTE:* The XCM25D controller includes all the functions necessary for the control of the ZX*Y units. For additional functionalities please contact your local Application Engineering representative.**

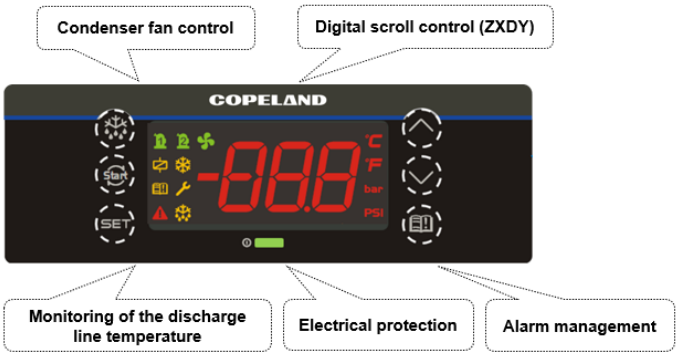

Figure 10: XCM25D controller functionality overview

2.10.3 Modbus communication

The XCM25D controller can communicate via Modbus (RS-485) connection to provide all running data. Additional commands can also be activated through Modbus connection. The Modbus map is available on request from the Application Engineering department at Copeland.

A pre-configured X-Web Supervisor device is also available and allows easy handling and connectivity with the XCM25D controller.

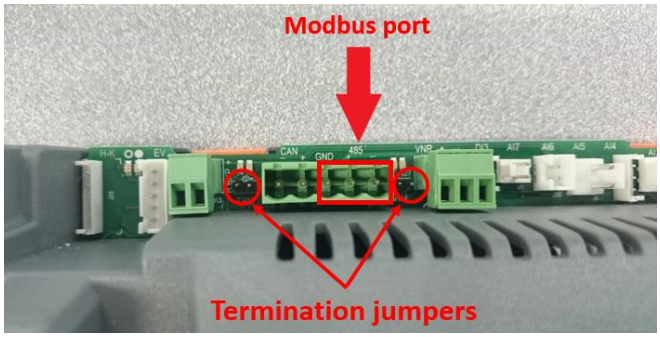

Figure 11: Modbus port and termination jumpers

***NOTE:* If the XCM25D controller is connected in chain the termination jumpers must be removed.**

2.10.4 Main control & safety features

Suction pressure control: Each unit is equipped with a suction pressure transmitter. The XCM25D controls the suction pressure by evaluating the input signal of the pressure transmitter. When using a digital unit (ZXDY), the setpoint (**C16**) and proportional band (**C17**) need to be adjusted. The suction pressure regulation for ZXMY units has to be defined by compressor cut-in (**C01**) and cut-out (**C02**) values. The signal of the suction pressure transmitter is also used for additional functionalities, pumpdown and keeping the compressor running within the approved envelopes.

Condensing pressure control: Each unit is equipped with a high-pressure transmitter. The XCM25D controls the condensing pressure by regulating the fan speed corresponding to the high-pressure transmitter signal. The unit controller can regulate the condensing pressure in two ways. The first approach is to keep a constant condensing temperature. This mode is utilized by the factory settings. The pre-adjusted setpoint is 27 °C as a universal setting. If lower condensing pressure is required set up the condenser setpoint (**E39**) to a lower value. The second control way is fan modulation based on compressor envelope. This mode of setpoint control is only available if a suction pressure input is not used. The parameter (**E38**) enables/disables the mode as needed. If this function is unused, the condensing temperature setpoint will be set as a parameter (**E39**) value. The compressor is allowed to run different minimum condensing temperatures based on the suction pressure of the compressor. This is the most energy efficient way to minimize the condensing temperature as much as possible.

Mechanical liquid injection on ZXLY*E: A mechanical regulation valve injects liquid refrigerant into the injection port of the scroll compressor to reduce discharge temperatures generated when the unit operates at increasing compression ratios. The regulation valve has a temperature sensor bulb in the top cap of the compressor to sense the hottest spot.

Automatic enhanced vapour injection (EVI) on ZXLY*IE: Control of an electronic expansion device based on the superheat in the additional heat exchanger for the EVI scroll compressor to create subcooling in liquid refrigerant coming from the receiver. In case of excessive discharge line temperatures, the superheat control is ignored and the controller will work in liquid injection mode in order to reduce the discharge gas temperature.

***NOTE:* The ZXLY*IE units have an additional subcooling of about 30 K. This must be considered when selecting the expansion device.**

Compressor phase reversal: Ensures that the compressor keeps running in one direction only (clockwise = right rotation) – necessary for a compliant scroll compressor to compress and pump refrigerant. Reset is automatic once the phase rotation is correct for the compressor.

Motor current overload protection: This feature eliminates the need for external current protection for the compressor motor.

Fixed high-pressure switch: This is a non-adjustable protection device designed to prevent the compressor from operating outside of its safe high-pressure range. Reset is automatic for a set number of trips (7) then the unit will lock out and require manual restart. This feature is important to prevent the unit from cycling under these controls for a long period of time.

- All ZX*Y units: 28 bar cut-out / 22 bar cut-in.

Adjustable high-pressure limitation: The unit controller provides the possibility to stop the unit at a required discharge pressure which is lower than the cut-out value of the fixed high-pressure switch. Detailed instructions can be found in **section 2.10.5 "Additional features for customization"** hereunder.

Discharge temperature protection: Each unit is equipped with a discharge line sensor (NTC). The XCM25D controller will stop the compressor if discharge temperatures reach unacceptable levels.

Adjustable low-pressure alarm: The unit controller features an adjustable low-pressure alarm managed by the suction pressure sensor. The factory setting of this alarm is the lowest permitted pressure of the refrigerant with the lowest pressure-vapour properties. If needed the user can modify this value according to the required application.

- ZXMY & ZXDY units: 0.5 bar rel
- ZXLY units: 0.05 bar rel

A crankcase heater is connected directly to the controller. The crankcase heater will be energized when the ambient sensor is below a given value (10 °C) and the compressor has been off for a defined period of time (5 minutes). The minimum off time does not apply at initial power up.

In addition to the above, the ZX*Y refrigeration unit has the following features:

- Liquid line assembly (filter-dryer and sight glass/moisture indicator)
- Anti-corrosion treatment to the condenser fins

The electronic controller is also the base controller for the connection of many optional and customer-supplied functions such as:

- Main load controller (or thermostat)
- Electric defrost heater contactor
- Evaporator fan contactor
- Superheat controller for one electronic expansion device

2.10.5 Additional features for customization

A lot of additional features are provided by the XCM25D controller. In the European design of the electrical panel a few of the additional functionalities are prearranged and can easily be installed by connecting additional hardware to the electrical terminals.

The tables in **Appendix 7** show the parameters that have to be changed in case a special feature of the controller should be activated. The tables do not show the required settings which have to be done by the system operator, eg, choosing correct setpoints for different components and different applications.

Component	Description	Prearranged terminals / Wiring diagram
Y3	Solenoid valve liquid line (not available on ZXDY units)	Terminals: X1.N / X1.8
S3	Room thermostat for pumpdown or direct control	Terminals: X1.9 / X1.10
Alarm contact	Sensor for evaporator or room	Terminals: X1.11 / X1.12
Sensor B7	Sensor for evaporator or room (NTC 10 kΩ)	Terminals: X1.13 / X1.14

Table 12: Pre-arranged additional connections

***NOTE:* After programming an additional function, the system will have to be restarted. To engage system restart, switch off the main power supply, wait for 5 seconds and switch it on again.**

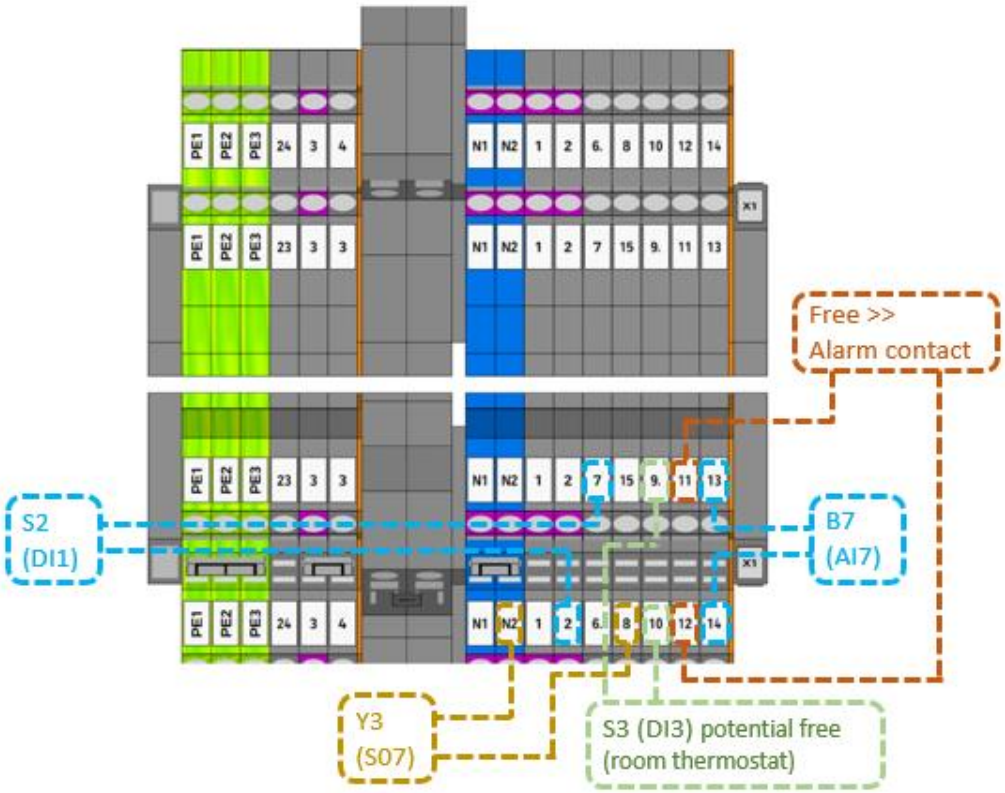

Figure 12: Pre-arranged additional connections

Digital output	Specifications
DO1, DO2 and DO3	Relay SPDT 16 A, 250 VAC
DO3	Relay SPST 8 A, 250 VAC
DO4 and DO5	Relay SPST 5 A, 250 VAC

Table 13: Digital output specifications

***NOTE:* Depending on the required functionalities additional components might be necessary. Please contact your local Application Engineering representative.**

***NOTE:* Check the current limitations given by the controller relays.**

***NOTE:* The solenoid valve function is not available on ZXDY units.**

Temperature control by means of an external room thermostat (not available on ZXDY units)

The temperature of a cold room or cooling cabinet can be controlled by means of an external room thermostat (Digital Input DI3, parameter **R07**). The parameters that must be changed to do this are listed in **Table 14** below.

Parameter	Description	Factory settings	Recommended settings / Comments
C05	Compressor regulation probe selection	1 = Suction pressure probe = SuP	Suction pressure switch / Room thermostat input = 3 = dIS
G56	Use the liquid line solenoid	NO	NO >> If a solenoid is used in the liquid line, see **section 2.15 "Pumpdown"** for parameter settings
R07	Digital Input 3 function	0 = Not used = nu	Suction pressure switch / Room thermostat input = 1 = SuS
R08	Digital Input 3 polarity	1 = Closed = CL	1 = Closed = CL *(no change)*

Table 14: External room thermostat – Parameters

With these settings the controller will switch the compressor according to the status of the connected device (room thermostat):

- if the input is closed, turn the compressor on (On-Off-compressor);
- if the input is open, turn the compressor off (On-Off-compressor).

Temperature control by means of an external temperature probe (not recommended for ZXDY units)

The temperature of a cold room or cooling cabinet can be controlled by means of an additional temperature (Analog Input AI7, component B7 in wiring diagram) probe (NTC, 10 kΩ – for detailed temperature/resistance curve, see **Appendix 8**). The probe can be located in the evaporator or in the room. The location of the probe has to be considered for the configuration of the **A19** setting. Based on the value provided by the **B7**-temperature sensor the compressor will be switched on and off according to the following graphics:

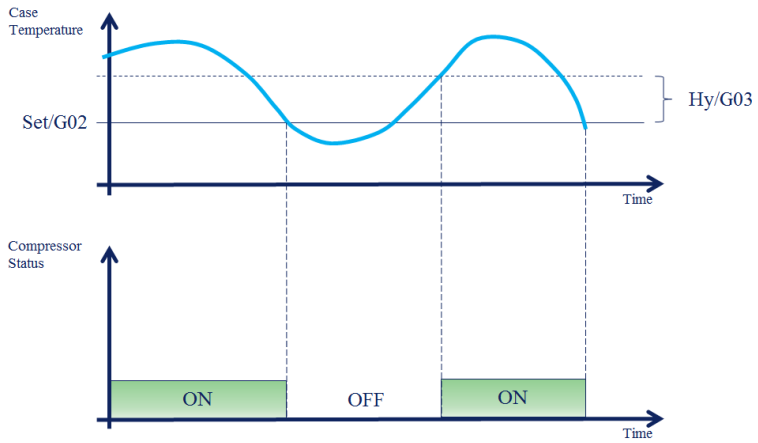

Figure 13: External temperature sensor – Functionality

The following parameters must be adjusted to control a cooling cabinet or a cold room with a temperature sensor:

Parameter	Description	Factory settings / *Range*	Recommended settings / Comments
A19	Probe 7 configuration	0 = Not used = nu	Thermostat temp (NTC 10 K) = 2 = tnt or Evaporator temp (NTC 10 K) = 5 = EPt
C05	Compressor regulation probe selection	1 = Suction pressure probe = SuP	Case temperature = 2 = CSt
G01	Case temperature probe selection	0 = Not used = nu	Thermostat temperature = 4 = tnt or Evaporator temperature = 5 = EPt
G02	Setpoint case temperature	2 °C	Choose setpoint according to requirements of cooled goods
G03	Position differential case temperature	1 K *0.1 to 25.5 K*	Setpoint G02 + positive differential G03 results in cut-out value for compressor
G04	Case temperature lower limit G02	-10 °C *-40 to G05 °C*	Define limits to avoid wrong settings for G02
G05	Case temperature upper limit G02	+15 °C *G04 to 110 °C*	Define limits to avoid wrong settings for G02
G06	Emergency run on-time	2 min *0 to 255 min*	In case of probe failure, the compressor will cycle for a time defined by G06 & G07
G07	Emergency run off-time	1 min *0 to 255 min*	In case of probe failure, the compressor will cycle for a time defined by G06 & G07

Table 15: External temperature sensor – Parameters

Please check that **G56** is set to **"NO"**, ie, "no solenoid valve in the liquid line". Also check that no additional digital inputs are configured (Digital Input DI3; parameter R07 has to be set to "not used" = **nu** = 0).

Adjustable discharge pressure limitation

The controller has dedicated parameters to provide the possibility of adjustable discharge pressure cut-out.

Parameter	Description	Factory settings	Recommended settings
E58	Condenser temperature / Pressure threshold for high alarm	22.3 bar	Required value
E61	Condenser temperature / Pressure threshold for alarm recovery	18.3 bar	Required value

Table 16: Discharge pressure limitations

Low ambient operation

Very low ambient temperatures can result in malfunction of expansion devices because of insufficient pressure difference. Therefore, pressure cut-out during system start-up can occur. For proper operation of the expansion devices, the unit running time must allow to build up sufficient condensing pressure.

At low ambient conditions, the compressor will need to run for a minimum period of time to allow the system pressures to stabilize. If the unit operates below a defined ambient temperature (ambient temp. < **C12**) or if the ambient sensor has failed, the compressor should run for a set period of time (**C14**) when it is started based on a low suction reading.

The unit will be turned on for the minimum run time in the following cases:

- a room thermostat input is closed;
- the case temperature cut-in setting is reached;
- the low-pressure input is closed.

The unit will start in any of these cases even if parameter **G56** is set to true, ie, the thermostat or case temperature controls the liquid line solenoid.

If the pressure drops below the cut-out value or the low-pressure input opens, the unit should continue to run for the remaining minimum on time (**C14**) or until a satisfactory condenser pressure is reached (**C13**).

If a suction pressure transducer is present and the suction pressure falls below a given value (**C15**) during the minimum on time (**C14**), then the compressor is switched off without considering the minimum compressor running time in order to avoid deep vacuum operation. Parameter (**C15**) is thus the last protection parameter.

Defrost

The XCM25D is able to control defrost on evaporators. The controller can handle electrical defrost or natural / fan defrost (select with parameter **G17**). The defrost probe (parameter **G12**) provides the XCM25D with information about the temperatures in the evaporator.

The intervals between defrost cycles are controlled by parameter **G23**. This can be done based on the integrated real-time clock or by fixed intervals.

The following parameters must be adjusted to control defrost in a cooling cabinet or a cold room:

Parameter	Description	Factory settings / *Range*	Recommended settings / Comments
A19	Probe 7 configuration	0 = Not used = nu	Evaporator temp (NTC 10 K) = 5 = EPt
G12	Defrost probe selection	0 = Not used = nu	5 = Evaporator temperature sensor = EPt
G17*	Defrost type	0 = Electrical = EL	0 = Electrical = EL; *1 = Hot gas defrost = In (not available on ZX*Y units);* 2 = Natural defrost (pulse defrost) = PLS
G18	Interval between defrost cycles	4 hours	0 to 120 hours; adjust to individual requirements
G19	Maximum duration of defrost	20 minutes	0 to 255 minutes; adjust to individual requirements
G20	Duration of pulse defrost	15 minutes	0 to G19
G21	Defrost termination temperature	10 °C	-40 to +110 °C
G22	Defrost delay time	15 minutes	0 to 255 minutes
G23**	Defrost interval mode	0 = Not used = nu	0 = nu = Not used; 1 = In = Interval; 2 = rtC = Real time clock
G24***	Display during defrost	DEFROST "dEF"	0 = dEF = Defrost; 1 = Set = Case temperature setpoint; 2 = It = Case temperature value; 3 = rt = Standard operation
G25	Maximum display delay after defrost	0 minute	0 to 255 minutes
G26	Drip time	1 minute	0 to 120 minutes
G27	Defrost at power-on	0 = NO	Avoids defrost after initial power up. If "YES", the controller will decide on defrost-related parameters if a defrost sequence is required after initial start-up.

Parameter	Description	Factory settings / *Range*	Recommended settings / Comments
G28	Workday defrost start 1	00:00	00:00 – 23:50 or nu = Not used
G29	Workday defrost start 2	04:00	00:00 – 23:50 or nu = Not used
G30	Workday defrost start 3	08:00	00:00 – 23:50 or nu = Not used
G31	Workday defrost start 4	12:00	00:00 – 23:50 or nu = Not used
G32	Workday defrost start 5	16:00	00:00 – 23:50 or nu = Not used
G33	Workday defrost start 6	20:00	00:00 – 23:50 or nu = Not used
G34	Holiday defrost start 1	00:00	00:00 – 23:50 or nu = Not used
G35	Holiday defrost start 2	04:00	00:00 – 23:50 or nu = Not used
G36	Holiday defrost start 3	08:00	00:00 – 23:50 or nu = Not used
G37	Holiday defrost start 4	12:00	00:00 – 23:50 or nu = Not used
G38	Holiday defrost start 5	16:00	00:00 – 23:50 or nu = Not used
G39	Holiday defrost start 6	20:00	00:00 – 23:50 or nu = Not used
G40	First weekly holiday	SUN = Sunday	0 = SUN; 1 = MON; 2 = TUE; 3 = WED; 4 = THU; 5 = FRI; 6 = SAT; 7 = nu = Not used
G41	Second weekly holiday	SUN = Sunday	0 = SUN; 1 = MON; 2 = TUE; 3 = WED; 4 = THU; 5 = FRI; 6 = SAT; 7 = nu = Not used
G42****	Fan operating mode	0 = cn = Stopped during defrost	0 = cn; 1 = On; 2 = cy; 3 = Oy
G43	Fan stop temperature	0 °C	-40 to +110 °C
G55	Fan delay after defrost / drip time	1 minute	0 to 255 minutes
S05	Relay output 2 configuration	0 = Not used = nu	6 = Defrost = dEF

Table 17: Defrost parameters

*** G17 parameter >> Two defrost modes are available:**

- **G17 = EL** → Defrost through electrical heater Compressor off
- **G17 = pulse** → Pulse / natural defrost Compressor off

**** G23 parameter >> Defrost interval mode:**

- **G23 = nu (0)** → Defrost functionality not used
- **G23 = In (1)** → Defrost in intervals G18
- **G23 = rtC (2)** → nables defrost for rtC (real time clock), allows timing of defrost cycles with G28 – G41

***** G24 parameter >> Display during defrost:**

- **G24 = dEF (0)** → Display shows "dEF" for defrost
- **G24 = SET (1)** → Display shows "G02" parameter value = Case temperature setpoint
- **G24 = It (2)** → Display shows display case temperature value
- **G24 = rt (3)** → Display will stay in standard operation

****** G42 parameter >> Evaporator fans function:**

- **G42 = cn (0)** → Will switch on and off with the compressor, off during defrost
- **G42 = On (1)** → Fans on, even if the compressor is off, off during defrost; after defrost, there is a timed fan delay allowing for drip time, set via the "G55" parameter.
- **G42 = cy (2)** → Fans will switch on and off with the compressor (on during defrost)
- **G42 = Oy (3)** → Fans will run continuously also during defrost

Manual defrost

Please check settings for evaporator fans. The XCM25D controller can also control the evaporator fans during manual defrost.

***NOTE:* For additional features please contact your local Application Engineering representative.**

2.11 XCM25D Electronic controller – Programming

CAUTION
Low refrigerant charge! Compressor damage! Never energize the unit without minimum refrigerant system charge. There is a risk of malfunction of the controller in deep vacuum operation which can cause compressor damage.

2.11.1 Programming the local display



Figure 14: Local display

LED	Mode	Function
1	On	Compressor 1 enabled
	Flashing	Anti-short cycle delay enabled
	On	Condensing fans enabled
bar	On	Display in bar
	Flashing	Programming mode
PSI	On	Display in PSI
	Flashing	Programming mode
	On	When browsing the service menu
	Flashing	In fast access menu
	On	When browsing the alarm menu
	Flashing	A new alarm occurred
	On	An alarm is occurring
	On	Digital unloader solenoid on
	On	In defrost
	On	Evaporator fans - Liquid line solenoid valve on

Table 18: LED functions description

***NOTE:* By default, the local display will show the value of the suction pressure during operation. This can be changed by choosing another value for parameter B03 (Remote Display visualization).**

Setting for B03	Value shown on the display
0	P1 value = Suction pressure
1	P2 value = Mid-coil temperature (condenser)
2	P3 value = Discharge line temperature
3	P4 value = Vapour inlet temperature EVI
4	P5 value = Vapour outlet temperature EVI
5	P6 value = Ambient temperature
6	P7 value = Not used in factory setting
7	PEr value = Probe error
8	Aou value = Analog output

Table 19: Display visualisation

2.11.2 Remote display CCM60

This device allows for remote monitoring and control of the XCM25D controller via cable. The CCM60 has the same interface as the XCM25D controller therefore the commands and symbols are identical. The remote display shall be mounted on a vertical panel, in a 29 mm x 71 mm hole, and secured using the special bracket supplied – see **Figure 15**.

The temperature range allowed for correct operation is 0 to +60 °C.

Avoid places subject to strong vibrations, corrosive gases, excessive dirt or humidity. Allow for air to circulate through the cooling holes.

When front-mounted, the remote display is IP65 rated.

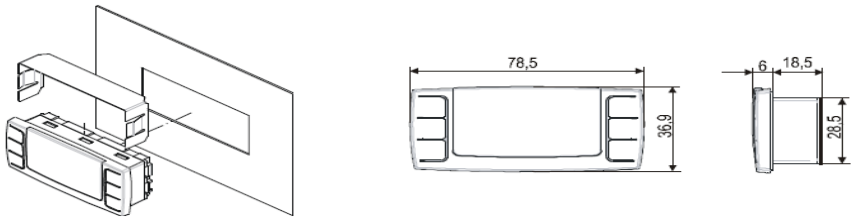

Figure 15: Remote display front panel mounting

The remote display is a proprietary bus of communication for Copeland Controls HMI (x-rep, CCM60) interfaces. There are two connection terminals on the back of the remote display (+ and -).

***NOTE*: Copeland recommends using a shielded cable twisted pair 2 x 0.5 mm².**

The device must be connected to the VNR-terminal on the unit controller according to the polarity. **Figure 16** shows the VNR terminal on the unit controller.



Figure 16: VNR connection for the remote display

Before connecting cables make sure the power supply complies with the hardware requirements. Separate the terminal cables from the power supply cables, the outputs and the power connections.

2.11.3 Single commands

SET	Press the SET button to display the target setpoint. In programming mode, this allows to select a parameter or to confirm an operation.
Start	Press the RESET button and hold for 5 seconds to reset any lockouts if the current state of the controller allows for it to be reset.
	(UP) To view the fast access menu. In programming mode, this browses the parameter codes or increases the displayed value.
	(DOWN) In programming mode, this browses the parameter codes or decreases the displayed value.
	(SERVICE) To enter the service and alarm menu.
	Hold for 3 seconds to start a manual defrost or terminate an active defrost.

Table 20: Single commands

2.11.4 Double commands – Entering programming level 1 "Pr1"

+	Press simultaneously for about 3 seconds to lock (**PoF**) or unlock (**Pon**) the keyboard.
SET +	Press simultaneously to leave the programming mode or menu. On submenus **rtC** and **EEV** this combination allows to go back to the previous level.
SET +	Press simultaneously for about 3 seconds to access the first level of programming mode.

Table 21: Double commands

The device provides 2 programming levels:

- **Pr1** with direct access
- **Pr2** protected with a password (intended for experts)

2.11.5 How to program the parameters (Pr1 and Pr2)

Access pre-program level	SET + ▽	Press simultaneously for about 3 seconds to access the pre-programming level. The message **rtC** (real-time clock) appears.
Access program level	△ or ▽	Press the **Up** or **Down** key until the message **Par** appears.
Access Pr1	SET	Press the **SET** button to enter the program level. First parameter appears.
Select item	△ or ▽	Select the parameter or submenu using the arrows.
Show value	SET	Press the **SET** button.
Modify	△ or ▽	Use the arrows to modify the value.
Confirm and store	SET	Press the **SET** button: the value will blink for 3 seconds, then the display will show the next parameter.
EXIT	SET + △	Press simultaneously to exit the programming mode or wait for 30 seconds without pressing any key.

Table 22: Programming level 1 parameters

When entering the programming level for the first time the display will show the **rtC** (real time clock) label.

- Press SET to access parameters N01/02/03/04/05 to adjust time & date. For further details, **see section 2.13 "Parameters level 1 – Required settings".**
- Press △ or ▽ to change from the rtC label to the Par label, in order to access programming level 1.
- Press SET: the parameters of programming level 1 can be changed.

2.11.6 Entering programming level 2 "Pr2"

To enter the Pr2 programming menu:

- Press SET + ▽ simultaneously for 3 seconds. The first parameter label will be displayed.
- Press ▽ till the **T18** label is displayed, then press the SET key;
- The blinking **PaS** label will be displayed; wait for a few seconds;
- The display will show "**0 - -**" with blinking 0: insert the password [**321**] using the △ and ▽ keys and confirming with the SET key.

2.11.7 Fast access menu

The fast access menu contains the list of probes and some values that are automatically evaluated by the board such as the superheat and the percentage of valve opening.

"nP" or **"noP"** stands for "Probe not present" or "Value not evaluated". **"Err"** means "Value out of range" or "Probe damaged, not connected or incorrectly configured".

Entering fast access menu		Press and release the **UP** arrow. The duration of the menu in case of inactivity is 3 minutes. The values that will be displayed depend on the configuration of the board.
Use the  or  arrow to select an entry, then press  to see the value or to go on with another value.	**P1P**: Pressure value of the P1 probe (suction pressure) **P2t**: Temperature value of the P2 probe (not valid) **P2P**: Pressure value of the P2 probe (discharge pressure) **P3t**: Temperature value of the P3 probe (discharge line temperature) **P6t**: Temperature value of the P6 probe (ambient temperature) **P7t**: Temperature value of the P7 probe (free) **SH**: Value of superheat. nA = not available **oPP**: Percentage of step valve opening **LInJ**: Status of the liquid line solenoid ("On" – "Off"). This information is available only if one relay is set as "Liquid Line Solenoid". **SEtd**: Value of the dynamic setpoint (condenser fan SET). This information is available only if the dynamic setpoint function is enabled. **AOO**: Percentage of the analog output (0-10 V or TRIAC PWM Mod.). This information is available only if the 0-10 V or TRIAC PWM Mod. is enabled. **dStO**: Percentage of the PWM output driving the valve of the digital scroll compressor **Lt**: Minimum room temperature **Ht**: Maximum room temperature **HM**: Menu **tU1**: Voltage reading V1 (not valid in standard configuration) **tU2**: Voltage reading V2 (not valid in standard configuration) **tU3**: Voltage reading V3 (not valid in standard configuration) **tA1**: Current reading I1 **tA2**: Current reading I2	
Exit		Press simultaneously or wait for the timeout of about 60 seconds

Table 23: Fast access menu

2.12 XCM25D controller keyboard

2.12.1 How to lock the keyboard

Keep the  and  keys pressed simultaneously for more than 3 seconds. The **"PoF"** message will be displayed and the keyboard will be locked. At this point it is only possible to see the setpoint or the maximum or minimum temperatures stored. If a key is pressed for more than 3 seconds, the **"PoF"** message will be displayed.

2.12.2 How to unlock the keyboard

Keep the  and  keys pressed simultaneously for more than 3 seconds, till the **"Pon"** message is displayed.

2.13 Parameters level 1 – Required settings

The XCM25D is preconfigured to reduce the required settings on job-site to a minimum. In most cases, it will not be necessary to enter programming level 2 **"Pr2"**. **Table 24** gives an overview of the parameters available in programming level 1 **"Pr1"**.

***NOTE:* When changing parameters C01 and C02, a reset of the controller (interruption of power supply) is required.**

Parameter	Description	Unit / range	Factory settings		
			ZXMY	ZXLY	ZXDY
C01	Compressor cut-in pressure setpoint	bar*	2.7	0.4	N/A
C02	Compressor cut-out pressure setpoint	bar*	1.1	0.1	N/A
C07	Refrigerant selection for regulation	R454A, R454C, R455A, R1234yf, R513A, R134a, R448A, R449A, R404A, R450A, R507A, R407A, R407C, R407F	R454C		
C16	Digital compressor setpoint	bar*	N/A	N/A	2.1
C17	Proportional band for compressor regulation	bar*	N/A	N/A	2.0
C21	Cycle time for digital compressor	sec	N/A	N/A	10
C24	Minimum capacity for digital compressor	%	N/A	N/A	20
C25	Maximum capacity for digital compressor	%	N/A	N/A	100
D29	Low-pressure alarm value	bar*	0.6	0.0	0.6
E39	Condenser setpoint	°C	27.0		
E46	Regulation band of variable fan	°C	10.0		
N01	Current minute	-	-		
N02	Current hour	-	-		
N03	Day of the month	-	-		
N04	Month	-	-		
N05	Year	-	-		
T18	Access to Pr2 level	-	Password: 3 2 1		

** Pressure values are always relative*

Table 24: Parameters in programming level Pr1

***NOTE*: The full list of parameters in programming level "2" can be found in Technical Information TI_Unit_ZX_A2L_01 "Copeland ZX*Y outdoor refrigeration units for A1 & A2L applications – XCM25D Controller Parameter List".**

2.14 Digital operation



WARNING
Ignition source in a potentially flammable atmosphere! Fire hazard! All electrical components, including digital solenoid valves, could be a source of ignition and must always be switched off during service and maintenance.

A digital unit is able to operate in a part-load mode. Part-load operation is achieved by loading and unloading of the digital scroll compressor for certain periods of time (time cycles). The cycle of time can be chosen between 10 and 30 seconds. Example: if the time cycle is 20 seconds at 50 % of capacity request, the compressor will run for 10 seconds loaded and 10 seconds unloaded. For proper commissioning of the digital unit the diagram in **Figure 17** must be considered.

The regulation starts when the suction pressure (**AI1**) increases and reaches the value (C16-C17/2+(C17*C24)/100). Within the adjustment range (C16-C17/2 ~ C16+C17/2) the digital scroll compressor is activated in PWM mode according to the value of the control variable.

When the pressure is higher than (C16+C17/2) then the TRIAC output is at maximum capacity. When the pressure is lower than (C16+C17/2) but higher than (C16-C17/2) the digital compressor modulates the

capacity according to the proportional band. If the pressure is lower than (C16-C17/2) the digital compressor switches off.

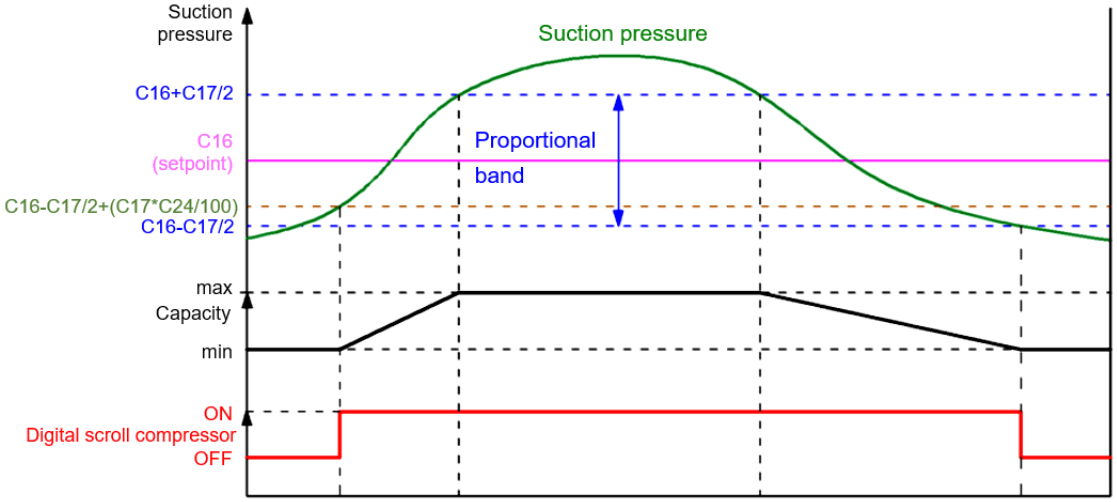

Figure 17: Digital operation

***NOTE:* When the digital valve on the compressor is discharged the compressor is loaded.**

***NOTE*: At start-up the valve is energized for C20 start-up time, ie, time interval with the digital valve energized before regulation starts. It ranges from 0 to 10 seconds.**

2.15 Pumpdown

WARNING
Operation below atmospheric pressure! Fire hazard! Never operate the system below atmospheric pressure as a flammable mixture could form inside the system. Make sure that air does not enter the system. Use a separate A2L-dedicated recovery unit so that the compressor does not have to be used.

CAUTION
System pressure below atmospheric pressure! Compressor damage! Never operate the system below atmospheric pressure. There is a risk of malfunction of the controller in deep vacuum operation which can cause compressor damage.

Pumpdown functionality is provided by the XCM25D controller for ZXMY & ZXLY standard units only. It is not released for ZXDY digital units.

***NOTE*: Depending on the compressor and/or system design an increase of suction pressure is possible when the unit stops. Therefore, pumpdown operation requires higher differences between cut-in and cut-out setpoints. These values must be adjusted according to application.**

2.15.1 External pumpdown without XCM25D integration (not available on ZXDY units)

The easiest solution for pumpdown is to install a solenoid valve in the liquid line (not part of the standard delivery) and to control it directly with the room thermostat or other external devices. The settings on the unit for compressor cut-in and cut-out (**C01** & **C02**) can easily be adjusted for pumpdown. The disadvantage of this easy solution is that the controller is not informed that a solenoid valve is installed and therefore some protection features of the controller, eg, maximum pumpdown time in case of blocked solenoid, will not work.

2.15.2 Pumpdown by the unit controller (not available on ZXDY units)

In case of pumpdown by the unit controller (available only on ZXMY and ZXLY units) the user needs to install a solenoid valve in the liquid line (not part of the standard delivery). In addition to the liquid line solenoid valve a digital input signal from a room thermostat or a case temperature sensor must be connected to the XCM25D. There are additional terminals available in the unit which allow for easy connection of additional hardware if required. The wiring diagram also shows these optional features. The liquid line solenoid valve Y3 can be connected to terminals X1.N & X1.8. The terminals X1.9 & X1.10 can be used for a room thermostat (connected to **DI3**).

If a temperature sensor is preferred the analog input **AI7** can be used (Caution: controller settings are not preconfigured for temperature sensor). For details about alternative options please see **sections 2.15.3 "Pumpdown with room thermostat (not available on ZXDY units)" and 2.15.4 "Internal pumpdown with temperature sensor (case temperature)"**.

In any case there are limitations for the cut-out values of the compressors given by the envelopes. The minimum cut-out settings are shown in **Table 25** below. Those values are also applicable in case pumpdown is carried out by means of an additional low-pressure switch. Operation of the unit below the suction pressures shown in the table could result in tripping of the compressor internal motor protector (Klixon, error code **E28**). The envelopes are in accordance with Select software available at www.copeland.com/en-gb/tools-resources.

Unit family	R454A	R454C	R455A	R1234yf
ZXMY	1.2 bar rel	0.8 bar rel	0.9 bar rel	0.51 bar rel
ZXDY	Not approved for pumpdown			
ZXLY	0.14 bar rel	-0.09 bar rel	-0.03 bar rel	-

Table 25: Minimum cut-out value for pumpdown

***NOTE:* ZXLY*IE units have an additional 5-second switch-off delay which must be taken into account for the pumpdown function.**

***NOTE:* The values in the table show the lowest suction temperatures / pressures in the envelopes. Depending on the condensing temperature in the actual system it might be required to adjust / increase the cut-out value according to the approved envelope published in Select.**

2.15.3 Pumpdown with room thermostat (not available on ZXDY units)

Configure parameter **C05** "Compressor regulation probe selection" to "3" (Suction pressure switch / Room thermostat input). In addition, change setting for **G56** from "0" to "1". This is information to the controller that a solenoid valve is present.

Change the functionality of Digital Input 3 (**DI3**) (Parameter **R07**) to setting 1 (Suction pressure switch / Room thermostat input) and adjust the relay output configuration **S07** to 7 (Liquid line solenoid).

Parameter	Factory settings	Pumpdown settings
C02	2 bar rel	Cut-out value for pumpdown, eg, 0.2 bar rel
C05	1 = Suction pressure probe = SuP	3 = Suction pressure switch / Room thermostat = dIS
G11	3 minutez	Maximum pumpdown time
G56	0 = No	1 = Yes
R07	0 = Not used = nu	1 = Suction pressure switch / Room thermostat = SuS
S07	0 = Not used = nu	7 = Liquid line solenoid = LLS

Table 26: Pumpdown 1

Room thermostat switch status	Liquid line solenoid valve status
Closed	Switch on / Energized
Open	Switch off / De-energized

Table 27: Pumpdown 2

For example, if the room thermostat switch is closed, the liquid line solenoid valve is activated, and the compressor will run when the suction pressure value is higher than the compressor cut-in value **C01**.

The liquid line solenoid valve will be switched off if the room thermostat switch is open and pumpdown will start. The compressor will stop once the suction pressure value is lower than the compressor cut-out value **C02** or when the pumpdown duration is longer than the maximum pumpdown time **G11** setting.

The functionality of parameter **G11** protects the cooled goods in case of component damage, eg, the liquid line solenoid is mechanically blocked and not able to stop refrigerant mass flow. In that case the compressor cut-out pressure will not be reached and the compressor will continue to run. The only limitation to stop the compressor is the maximum pumpdown time. **G11** should be adjusted in a way that, at all operating conditions, it allows pumpdown to compressor cut-out value **C02** plus a defined safety time, eg, 2 minutes.

2.15.4 Internal pumpdown with temperature sensor (case temperature)

It is also possible to carry out pumpdown functionality in case a temperature sensor is used for temperature control (not part of the standard delivery). Parameters **G56** and **S07** have to be set up as described in **section 2.15.3 "Pumpdown with room thermostat (not available on ZXDY units)"**.

The control of a cold room or cooling cabinet can be realized with a temperature sensor (change parameter **G01** according to the probe location). Parameter **A19** must be set up as thermostat temperature. The temperature setpoint is defined by parameter **G02**. Adjust the temperature range with positive differential value **G03**.

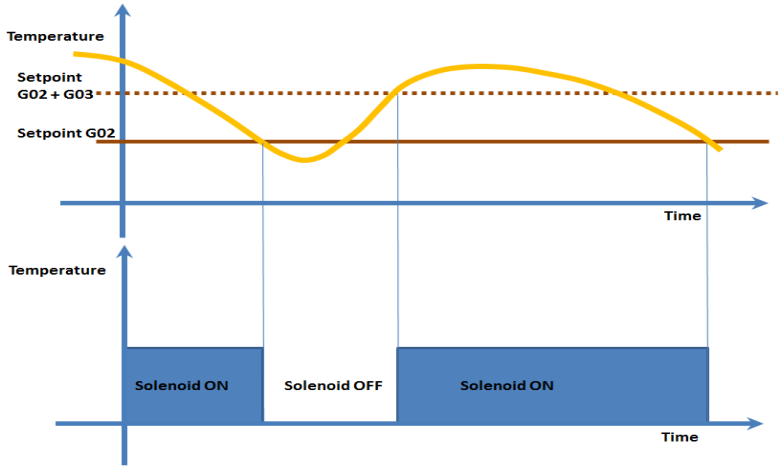

Figure 18: Pumpdown functionality with temperature sensor

If the temperature increases and reaches setpoint plus differential, the liquid line solenoid output relay will energize the coil to open the valve. The compressor will be controlled by suction pressure.

The temperature value is to be set between parameters **G04** and **G05**.

In case of fault in the thermostat probe the opening and the closing of the solenoid valve relay are timed through limp-along parameters (**G06** and **G07**).

Parameter	Factory settings	Pumpdown settings / Comments
A19	0 = Not used = nu	2 = Thermostat temperature = tnt
C01	2.7 / 0.4 bar rel	Cut-in value for pumpdown
C02	1.1 / 0.1 bar rel	Cut-out value for pumpdown, eg, 0.2 bar rel
C05	1 = Suction pressure probe = SuP	2 = Case temperature probe = CSt
G01	0 = Not used = nu	4 = Thermostat temperature = tnt
G02	+2 °C	Setpoint for temperature, eg, +2 °C for meat
G03	+1 °C	Positive differential defines upper cut-out value
G04	-10 °C	Lower setpoint limit
G05	+15 °C	Upper setpoint limit
G06	2 minutes	On time in case of probe failure
G07	1 minute	Off time in case of probe failure
G11	3 minutes	Maximum pumpdown time
G56	0 = No	1 = Yes
S07	0 = Not used = nu	7 = Liquid line solenoid = LLS

Table 28: Internal pumpdown with temperature sensor

If temperature ≥ **G02** + **G03**, switch on liquid line solenoid.

If temperature ≤ **G02**, switch off liquid line solenoid and the compressor will continue to operate until most of the refrigerant on the low side boils off and is pumped through the compressor into the condenser and receiver. As the suction pressure falls below the low-pressure cut-out value (**C02**), the compressor will cycle off.

The temperature value depends both on parameter **G02** and parameter **G11** (maximum pumpdown time). It means that when the liquid line solenoid is off, the compressor will stop because of suction pressure decrease within **G11** time. If the running time of the compressor exceeds **G11** value, the compressor will be forced to shut down and the controller will generate a pumpdown alarm.

2.16 Reset to factory settings – Copeland Controls Hot Key

2.16.1 How to save factory settings or user settings

There is no way to reset the XCM25D controller to factory settings other than with additional equipment. Copeland recommends using the Copeland Controls Hot Key (not part of the standard delivery) to save the factory settings at initial power up. The same hot key can also be used to save user settings.

Thanks to a special programming software (Copeland Controls Wizmate) and corresponding hardware (Copeland Controls Prog-Tool), the user can:

- pre-program hot keys
- copy hot keys
- change parameter levels
- compare parameter lists

For further information please visit our website at www.copeland.com/en-gb or contact your local Application Engineering representative at Copeland.

*2.16.2 Copeland Controls Hot Key for ZX*Y units with XCM25D controller*

The Copeland Controls Hot Key **DK00000300** can be used for the uploading and downloading of parameter lists. Copeland ident number 3226456.



Figure 19: Copeland Controls Hot Key

2.16.3 Location of the hot key plug connection on the XCM25D controller

The hot key plug connection is located on the upper left corner of the XCM25D.

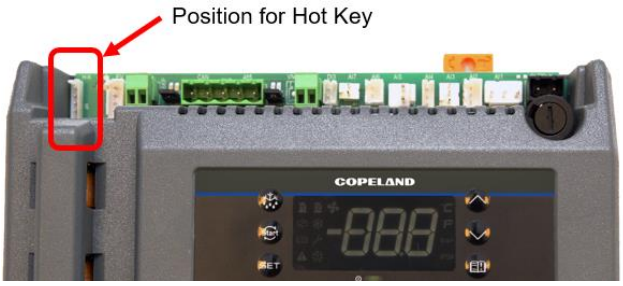

Figure 20: Location of hot key plug connection

2.16.4 How to program a hot key from the controller (upload)

- Program the controller with the front keypad.
- When the controller is on, insert the hot key and press the UP key; the "uPL" message appears followed by a flashing "End" label.
- Press the SET key and the "End" label will stop flashing.
- Turn the controller off, remove the hot key and then turn it on again.

***NOTE:* The "Err" message appears in case of a failed programming operation. In this case press the UP key again to restart the upload, or remove the hot key to abort the operation.**

2.16.5 How to program a controller using a hot key (download)

- Turn the controller off.
- Insert a pre-programmed hot key into the 5-pin receptacle and turn the controller on.
- The parameter list of the hot key will be automatically downloaded into the controller memory. The "doL" message will blink followed by a flashing "End" label.
- After 10 seconds the controller will restart working with the new parameters.
- Remove the hot key.

***NOTE:* The message "Err" is displayed in case of a failed programming operation. In this case turn the controller off, then on again to restart the download, or remove the hot key to abort the operation.**

2.17 Troubleshooting – Alarm history

The controller records the total number of alarm activations (max 50) in the alarm menu – see **Appendix 6**.

Action	Key or display	Notes
Enter menu		Push and release the ALR key.
Waiting for action	SEC	The menu to change the section will be entered. The alarm list section is active.
Enter section list		Press SET to confirm. The following list will be available to select the proper network function.
Select active alarm code from list	 or 	Scroll the list of active alarms by alarm number (letter + number, A01-A50). Press  to see the alarm name or code. Press  to see the next active alarm.
Select the alarm to see the detailed rtC information		Enter the sub menu with alarm time details.
Select detailed information from active alarm list	 or 	<u>With the rtC activated</u>: The Hur (hour) parameter is displayed. Press  to see the alarm hour. Press : Min is displayed. Press  to see the alarm minute. Press : dAy is displayed. Press  to see the alarm day. Press : MOn is displayed. Press to see the alarm month. Press : YEA is displayed. Press  to see the alarm year. ***NOTE:* The clock info indicates the START time of the alarm.** <u>Without the rtC activated</u>: The COn (hours) parameter is displayed. Press  to see the compressor working hours. To exit: press  or wait for 15 seconds without pressing any key.
Exit menu		Press  simultaneously or wait for about 10 seconds without pressing any key.

Table 29: How to check the alarm list

2.18 Compressor motor protection

The electronic controller protects the compressor motor against the following:

- overcurrent;
- phase loss;
- incorrect phase rotation;
- voltage imbalance.

If the compressor motor current exceeds a predefined (non-adjustable) current limit, the electronic controller shuts the unit down and generates an error signal. For this function two of the main phase supply lines to the compressor (compressor via the contactor) are routed through the current sensors.

2.19 System pressure protection

2.19.1 High-pressure safety switch

A high-pressure safety switch is registered by the electronic board. The sensing device is a non-adjustable, high-pressure switch that will open in the event of an abnormally high discharge pressure (above 28 bar for all unit models).

- The unit will stop then and restart automatically after a 5-minute delay and after the unit pressure has decreased to 22 bar.
- After 7 successive HP cut-outs over 1 hour, the unit will lock out. In this case a manual reset will be necessary.

2.19.2 Pressure relief valve

There is no factory-assembled pressure relief valve on the units. If a pressure relief valve is required, the connection port with a ⅜"-NPT thread located on the pipe after the condenser should be used. Also refer to **section 3.4 "Pressure relief valve (PRV)"** for more information.

2.19.3 Low pressure safety

The unit is always equipped with a suction pressure transmitter which takes care for protection against vacuum operation.

2.20 Other inputs of the XCM25D controller

2.20.1 Customer-supplied control (room thermostat)

The XCM25D electronic controller uses a digital input (**DI3**) open/close signal (such as the switching action of a normal commercial thermostat) and relays a similar action as an output to the compressor contactor in the case of a thermostat-controlled (parameter **C05**) system – see wiring diagrams in **Appendices 2 to 4**. If the system is controlled by low-pressure cut-out for a multiple evaporator system and/or pumpdown system, the controller accepts signals directly from an adjustable low-pressure switch (optional).

2.20.2 Case temperature controller

An alternative method of system temperature control can be used. The electronic controller accepts an input from a common commercial thermostat (**DI3**, digital input). For details see **section 2.10.5 "Additional features for customization"**.

2.20.3 Ambient temperature sensor

An ambient temperature sensor is connected to the electronic controller. This temperature sensor has several functionalities like emergency mode control, lower fan speed limitation and crankcase heater control. The sensor is located on the backside of the compressor compartment.

2.21 Alarm output (DO5) of the XCM25D controller

The digital output **DO5** is pre-configured as an alarm contact. The relay (max. 5 A, 250 VAC) is activated in case of alarms and lockouts. Warnings will be shown only on the controller display.

3 Installation

WARNING
High pressure! Injury to skin and eyes possible! Be careful when opening connections on a pressurized item.

IMPORTANT
The installation location must be selected in accordance with local workplace safety regulations.

Copeland ZX*Y refrigeration units are delivered with a holding charge of neutral gas.

The refrigeration unit should be located in such a place to prevent any dirt, dust, plastic bag, leaves or papers from covering the condenser and its fins.

The unit must be installed in such a way that the airflow is not restricted.

A clogged condenser will increase the condensing temperature, thus reduce the cooling capacity, and lead to a high-pressure switch tripping. Clean the condenser fins on a regular basis.

3.1 Refrigeration unit handling

3.1.1 Transport and storage

WARNING
Risk of collapse! Personal injuries! Move units only with appropriate mechanical or handling equipment according to weight. Keep in the upright position. Respect stacking loads according to **Figure 21**. Do not stack anything on top of the unit packaging. Keep the packaging dry at all times.



Respect the maximum number of identical packages which may be stacked on one another, where "n" is the limiting number:

- **Transport: n = 0**
- **Storage: n = 0**

Figure 21: Maximum stacking loads for transport and storage

3.1.2 Weights

Refrigeration units			
Medium temperature			
Standard	**Weight (kg)**	**Digital**	**Weight (kg)**
ZXMY-020E	73	-	-
ZXMY-030E	80	ZXDY-030E	85
ZXMY-040E	86	ZXDY-040E	106
ZXMY-050E	112	ZXDY-050E	118
ZXMY-060E	114	ZXDY-060E	120
ZXMY-075E	116	ZXDY-075E	122
Low temperature			
Standard	**Weight (kg)**	**EVI**	**Weight (kg)**
ZXLY-020E	78	-	-
ZXLY-030E	81	-	-
ZXLY-040E	93	-	-
-	-	ZXLY-050IE	118
-	-	ZXLY-060IE	148.3
-	-	ZXLY-075IE	153.3

Table 30: Weights

3.2 Refrigeration piping connections

3.2.1 Refrigeration piping installation



WARNING
High pressure! Risk of personal injury! The units are pressurized with dry air. Be careful when opening connections on a pressurized item.



WARNING
Low surface temperature! Danger of frostbite! The liquid line should be insulated with 19 mm insulation thickness. The temperature could be as low as -15 °C.

IMPORTANT
Tubing quality! Installation contamination! All interconnecting piping should be of refrigeration grade, clean, dehydrated and must remain capped at both ends until installation. Even during installation, if the system is left for any reasonable period of time, eg, 2 hours, pipes should be re-capped to prevent moisture and contaminant from entering the system.
Connection sizes! Unsuitable refrigerant flow rate! Do not assume that the service connection sizes on the unit (at the service valves) are in fact the correct size to run the interconnecting refrigeration pipes. The service valve sizes have been selected for convenience of installation and in some cases (larger units) these may be considered too small. However, for the very short pipe run within these units these service connection sizes are adequate. All interconnecting piping should be sized to satisfy the duty required.

The pipe should be sized to ensure optimum performance and good oil return. The sizing must also take into account the full capacity range through which a particular unit will need to operate.

Unit	Suction line (ODS)	Liquid line (IDS)
ZXMY-020E & ZXMY-030E ZXDY-030E ZXLY-020E & ZXLY-030E	¾" (19 mm)	½" (12.7 mm)
ZXMY-040E to ZXMY-075E ZXDY-040E to ZXDY-075E ZXLY-040E ZXLY-050IE to ZXLY-075IE	⅞" (22 mm)	½" (12.7 mm)

Table 31: Piping connection sizes

Pipe runs should be kept as short as possible, using the minimum number of directional changes. Use large radius bends and avoid trapping of oil and refrigerant. This is particularly important for the suction line. The suction line should ideally slope gently towards the unit. The recommended slope is 1/200 to 1/250. Upper and lower oil traps, double risers and reduced pipe diameters may be required for suction lines where long vertical risers cannot be avoided.

All pipes should be adequately supported to prevent sagging which can create oil traps. The recommended pipe clamp support distances are shown in **Table 32** below:

Tube size	Max distance between 2 clamp supports
½" (12.7 mm)	1.20 m
⅝" (16 mm)	1.50 m
⅞" (22 mm)	1.85 m
1 ⅛" (28.5 mm)	2.20 m

Table 32: Maximum distances between 2 clamp supports

3.2.2 Brazing recommendations

WARNING
Air/flammable refrigerant mixture! Creation of a potentially flammable atmosphere! Fire hazard! Remove all the refrigerant before opening the system. When working on a refrigerant-filled system, make sure to follow the safety and working instructions given in **Chapter 5 "Maintenance & repair"**.

WARNING
High temperature! Burning! Proceed with caution when brazing system components. Do not touch the compressor until it has cooled down. Ensure that other materials in the area of the compressor do not come into contact with it.

CAUTION
Blockage! Compressor breakdown! Maintain a flow of oxygen-free nitrogen through the system at very low pressure during brazing. Nitrogen displaces the air and prevents the formation of copper oxides in the system. If allowed to form, the copper oxide material can later be swept through the system and block screens such as those protecting capillary tubes, thermal expansion valves, and accumulator oil return holes.
Contamination or moisture! Bearing failure! Do not remove the plugs until the compressor is set into the unit. This minimises any entry of contaminants and moisture.

- Remove the discharge connection cap.
- Remove the suction connection cap.
- Open both valves mid-way. Care should be taken to avoid the holding charge releasing too quickly.
- Be sure tube fitting inner surface and tube outer surface are clean prior to assembly.
- Both tubes are extended from the refrigeration unit housing, therefore we recommend to isolate the housing by using a wet cloth on the copper tubing.
- Recommended brazing materials: a copper/phosphorous or copper/phosphorous/silver alloy rod should be used for joining copper to copper whereas to join dissimilar or ferric metals a silver alloy rod either flux coated or with a separate flux would be used.
- Use a double-tipped torch.

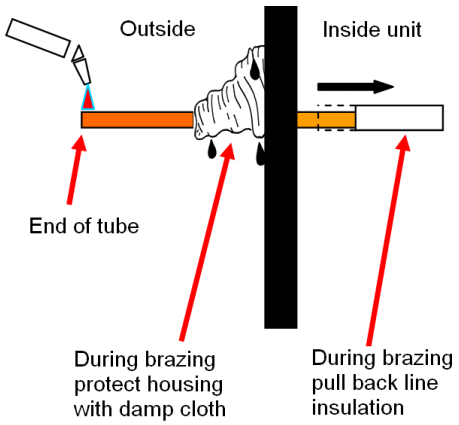

Figure 22: Brazing – Sectional view

3.2.3 Brazing procedure

WARNING
Air/A2L refrigerant mixture! Fire hazard! For systems using flammable A2L refrigerant, it is mandatory to flush oxygen-free nitrogen through the piping during the brazing process. Brazing must be carried out in compliance with ISO 14903.

Refer to **Figure 23** and procedure below for the brazing of the tubes:

- Fit the copper tube into the unit tube.
- Heat area 1. As the tube approaches brazing temperature,
- heat area 2 until braze temperature is attained. It is necessary to heat the tube evenly. Move the torch up and down and rotating around the tube.
- Add braze material to the joint while moving the torch around the joint to flow braze material around the circumference.

- Then heat area 3. This will draw the brazing material down into the joint.
- Recommended brazing material: Silfos with minimum 5 % silver or silver braze used on other compressors.

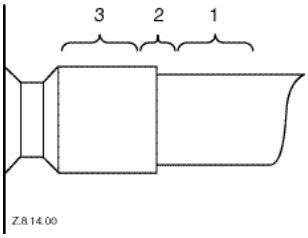

Figure 23: Suction tube brazing areas

***NOTE:* The time spent heating area 3 should be minimal. As with any brazed joint, overheating may be detrimental to the final result.**

***NOTE:* Due to the different thermal properties of steel and copper, brazing procedures may have to be changed from those commonly used.**

To disconnect:

- Heat joint areas 2 and 3 slowly and uniformly until solder softens and tube can be pulled out of the fitting.

To reconnect:

- See procedure above.

3.3 Electrical connection

WARNING
Conductor cables! Electrical shock hazard! Shut off power supply before undertaking any task on electrical equipment.

WARNING
Ignition source in a potentially flammable atmosphere! Fire hazard! The electrical connection of the scroll compressors is not an ignition source during normal operation but could become one if not installed properly according to installation instructions. Ensure correct mechanical and electrical installation.
System capacitors may remain charged for several minutes after shutdown. Before starting to work on the electrical installation make sure sparking is not possible. Continuously check if the ambient atmosphere is non-flammable when working on the electrical installation.

IMPORTANT
It is strongly recommended to install an additional circuit breaker for the unit power supply in order to be able to switch the unit off remotely in case of failure.

IMPORTANT
The front cover of the electrical cabinet is protected by a ground connection. Open the electrical box cover carefully to avoid pulling out the ground wire.

3.3.1 Power supply connections

WARNING
Electrical pins under voltage! Electrical shock hazard! There are unused fast-on pins (C1 & DO2) on the XCM25D which could be under voltage. They are covered by insulated fast-on flags in the factory. Handle carefully when removing insulating flags during service on site.

The electrical connection of the refrigeration unit to the power supply must be made by qualified technicians in compliance with valid electrical standards, for instance DIN EN 60204-1. Additionally, the voltage drop and line temperatures must be considered for cable selection.

Copeland ZX*Y refrigeration units are designed for 380-420 V / 3 Ph / 50 Hz power supply. A voltage tolerance of ± 10 % is acceptable.

The main switch and the circuit breaker must be switched off before opening the front panel.

Before commissioning, make sure that the neutral wire "N" is connected to terminal N and the ground protection wire "PE" is connected to terminal PE. The ground connections are indicated by red circles in the following figures.

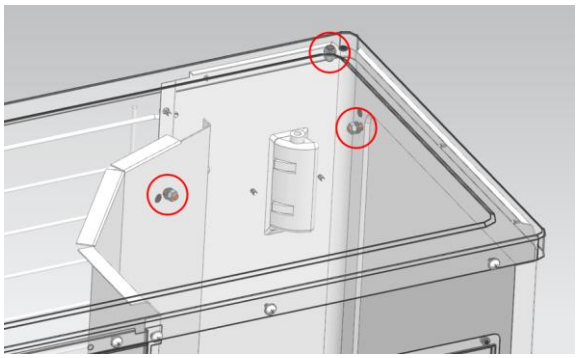

Figure 24: Ground connection on top cover, right cover and divider

All accessible metallic parts or objects within 3 metres of the refrigeration unit, eg, metal pipes, fence, ladders, railings etc... must be grounded with a dedicated grounding connection. A separate ground connection is provided on the baseplate of the unit (lower ground connection in **Figure 25** below).

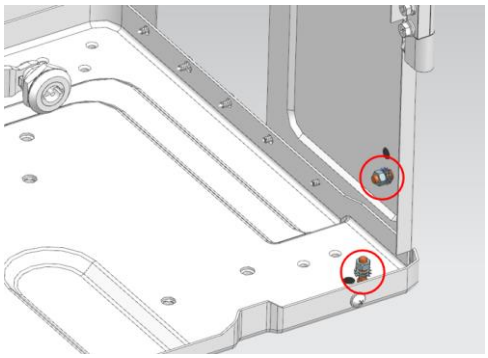

Figure 25: Ground connection on right cover and baseplate

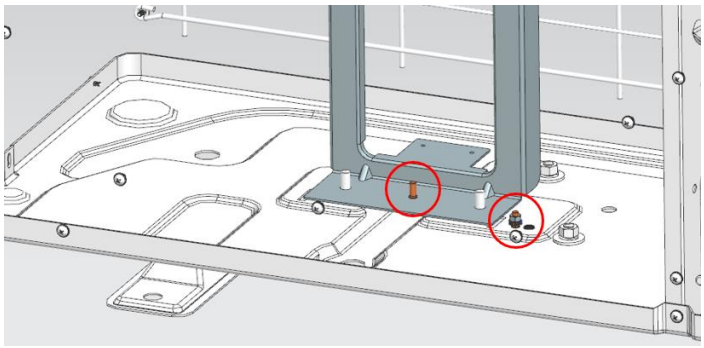

Figure 26: Ground connection on fan bracket and baseplate

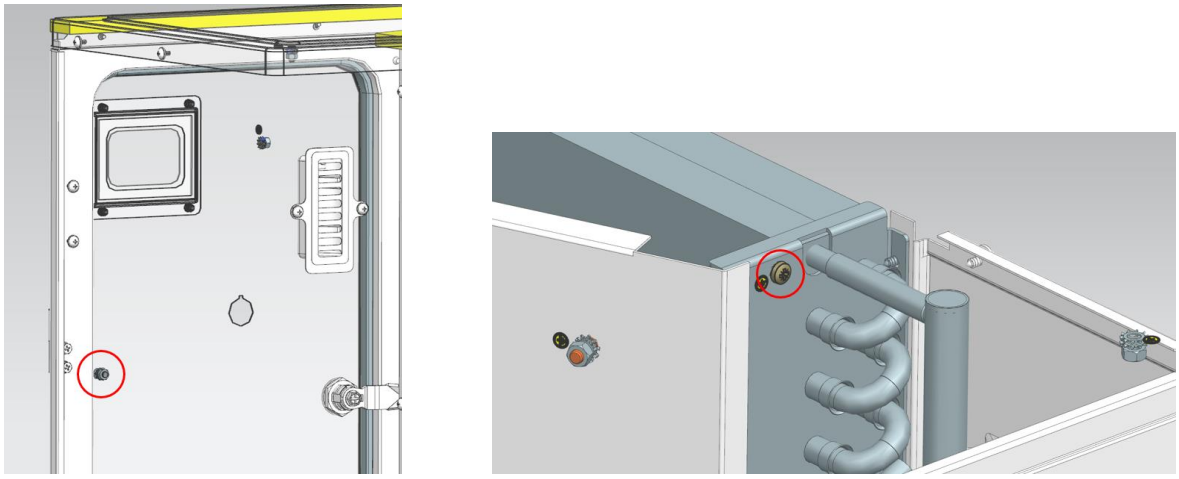

Figure 27: Ground connection on door and ground connection on condenser

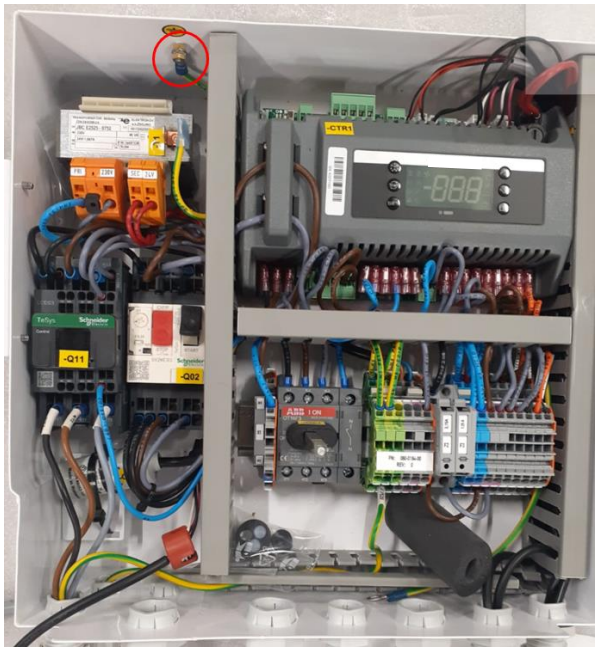

Figure 28: Ground connection in electrical cabinet

3.3.2 Maximum operating currents for cable selection

Unit model	Locked rotor	Rated current
Medium temperature standard units		
ZXMY-020E-TFD	26.0 A	5.21 A
ZXMY-030E-TFD	32.0 A	6.51 A
ZXMY-040E-TFD	50.0 A	8.81 A
ZXMY-050E-TFD	64.0 A	11.62 A
ZXMY-060E-TFD	74.0 A	13.32 A
ZXMY-075E-TFD	102.0 A	17.42 A
Medium temperature digital units		
ZXDY-030E-TFD	40.0 A	7.71 A
ZXDY-040E-TFD	48.0 A	11.52 A
ZXDY-050E-TFD	64.0 A	12.82 A
ZXDY-060E-TFD	74.0 A	13.82 A
ZXDY-075E-TFD	102.0 A	17.42 A
Low temperature standard units		
ZXLY-020E-TFD	24.0 A	6.20 A
ZXLY-030E-TFD	36.0 A	7.20 A
ZXLY-040E-TFD	46.5 A	9.20 A
Low temperature EVI units		
ZXLY-050IE-TFD	64.0 A	9.90 A
ZXLY-060IE-TFD	74.0 A	15.10 A
ZXLY-075IE-TFD	102.0 A	17.40 A

Table 33: Unit maximum rated currents for cable selection

3.3.3 Electrical protection standard (protection class)

- Units: IPX4.
- Scroll compressors (YB*, YBD* & YF*): IP54 according to IEC 34.
- Fans: IP44 according to IEC 34.
- Solenoid valve coils: IP65 according to DIN 43650.

3.3.4 Terminal box



WARNING
Ignition source in a potentially flammable atmosphere! Fire hazard! Any work on the energized terminals in the compressor terminal box could create an ignition. Do not touch the energized terminals with a tool or cable when the compressor is energized.
Compressors operating with flammable refrigerants shall use only the qualified terminal box supplied with the compressor.



CAUTION
Mechanical stress or shock! Overheating! Terminal Fusite damage and leakage! Mechanical stress and shocks to the Fusite must be avoided as they could damage the glass and/or ceramic which could result in hermeticity failure or loss of terminal performance. Precautions are required to prevent striking or bending of pins as it might result in hermeticity failure or loss of terminal performance.
Ensure correct connection of cables to the compressor terminal Fusite to avoid local overheating of Fusite pins which might lead to refrigerant leaks.

3.3.5 Low-pressure protection



WARNING
Operation below ambient pressure! Fire hazard! During operation below ambient pressure, a flammable mixture can form inside the system. Make sure that air does not enter the system.



CAUTION
Operation outside the application envelope! Compressor breakdown! A low-pressure protection shall be fitted in the suction line to stop the unit when it operates outside the envelope limits.

Make sure that the pressure never falls below atmospheric pressure. If it does, immediately de-energize the power supply of the unit and check the cause of the low pressure before restarting the unit.

3.3.6 Crankcase heater



IMPORTANT
Oil dilution! Bearing malfunction! Turn the crankcase heater on 12 hours before starting the unit.

The initial start-up in the field is a very critical moment for any compressor because all load-bearing surfaces are new and require a short break-in period to carry high loads under adverse conditions. **The crankcase heater must be turned on a minimum of 12 hours prior to starting the unit.** This will prevent oil dilution and bearing stress on compressor initial start-up. **The crankcase heater must remain energized during compressor off cycles.**

3.3.7 Insulation material

Insulation material is commonly used in a system to insulate the suction line, suction accumulator, expansion valve bulb or discharge line thermostat. When choosing the insulation material, particular attention shall be paid to its non-electrostatic properties, as it could be a potential ignition source.

3.3.8 Vibration



WARNING
Vibrations! Creation of a flammable atmosphere! Carefully check the system for vibrations.

Vibrations during unit operation can cause cracks which could lead to refrigerant leakage. This situation must be avoided by the system manufacturer/installer. To this end, the pipework must be carefully designed when connecting the unit to a system.

3.3.9 High-potential testing

WARNING
High-potential testing in a flammable atmosphere! Fire hazard! Make sure the atmosphere is non-flammable before performing high-potential testing. DO NOT perform any high-potential test when the compressor is charged with flammable refrigerant.

WARNING
Conductor cables! Electrical shock hazard! Shut off power supply before high-potential testing.

CAUTION
Internal arcing! Motor destruction! Do not perform high-voltage or insulation tests if the compressor housing is under vacuum.

Copeland subjects all units to a high-voltage test after final assembly. Each unit is tested according to EN 60034-1 at a differential voltage of 1000 V plus twice the nominal voltage.

Since high-voltage tests lead to premature ageing of the winding insulation, further additional tests of that nature are not recommended. However, if absolutely needed, they should be conducted with a lower voltage than described above. Please contact the Application Engineering department at Copeland for high-potential testing procedure and set-up.

Special attention should be paid when performing a high-potential test and reading the Megohm resistance on A2L compressors, as such tests can induce an electrical arc and cause a fire hazard.

For the same reason, compressors removed from an A2L-refrigerant system will need to have the oil drained and a nitrogen purge introduced to flush any remaining refrigerant from the compressor prior to high-potential testing and Megohm resistance reading.

3.3.10 Circuit breaker with overcurrent protection

WARNING
Isolating switch "On"! Electrical shock hazard! Turn off the main power supply to de-energise the unit before undertaking any task on the electrical equipment.

WARNING
Main switch "On"! Electrical shock hazard! Before changing the fuses, turn the isolating switch off to de-energize the unit.

Each unit is equipped with a circuit breaker with overcurrent protection. In case of overcurrent shut-off, reset must be done manually by a qualified technician.



Figure 29: Circuit breaker with overcurrent protection

Refrigeration units			
Medium temperature			
Standard	**Setting**	**Digital**	**Setting**
ZXMY-020E	4.1 A	-	-
ZXMY-030E	5.2 A	ZXDY-030E	7.3 A
ZXMY-040E	7.3 A	ZXDY-040E	10 A
ZXMY-050E	10.3 A	ZXDY-050E	11.3 A
ZXMY-060E	11.8 A	ZXDY-060E	12 A
ZXMY-075E	15.9 A	ZXDY-075E	15.9 A
Low temperature			
Standard	**Setting**	**EVI**	**Setting**
ZXLY-020E	5.0 A	-	-
ZXLY-030E	6.0 A	-	-
ZXLY-040E	8.0 A	-	-
-	-	ZXLY-050IE	9.5 A
-	-	ZXLY-060IE	14 A
-	-	ZXLY-075IE	16.5 A

Table 34: Main fuse settings

3.4 Pressure relief valve (PRV)

To meet the damage limitation requirements in the event of an external fire, a pressure relief valve should be fitted on the ZX*Y refrigeration unit using the dedicated ⅜" NPT connection port. Make sure to select a PRV that is qualified for this purpose and application. It is also recommended to select a valve with a thread or any other connection on the outlet so that a valve discharge pipe can easily be connected.

3.4.1 Pressure relief valve minimum requirements

Inlet connection	⅜" NPT
Outlet connection	½" SAE flare or bigger
Minimum flow area	31.67 mm^2
Minimum Kv value	0.68 m^3/h
Pressure relief setpoint	1.0 x PS = 31 bar

Table 35: PRV minimum requirements

3.4.2 Pressure relief valve installation

***NOTE:* The PRV manufacturer's instructions must be carefully followed during the PRV installation process.**

1) Remove the top cover to access the PRV connection port.



Figure 30: Top cover of ZX*Y refrigeration units

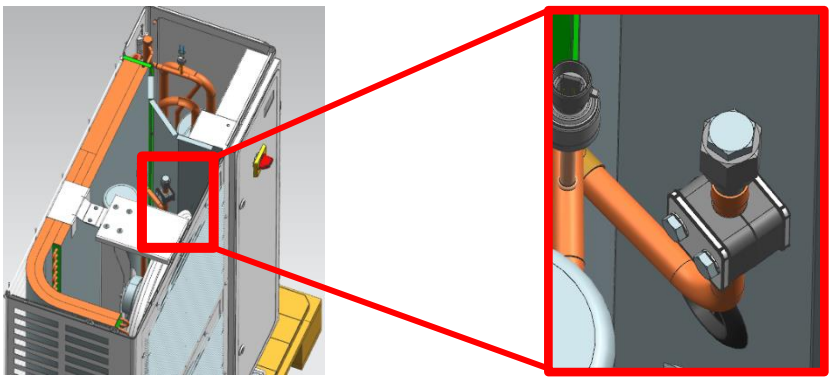

Figure 31: Access to PRV port

2) Unscrew the NPT plug. Hold the fitting while unscrewing to avoid damaging the brazing joint on the fitting.



Figure 32: PRV port without plug

3) Connect the discharge pipe to the PRV outlet and lead the discharge pipe to the outside of the refrigeration unit – see example in **Figure 33** below. If needed, fix the discharge pipe to avoid vibrations.

   PRV discharge pipe requirements:

   - Maximum length: 6 m
   - Minimum internal diameter: 10 mm

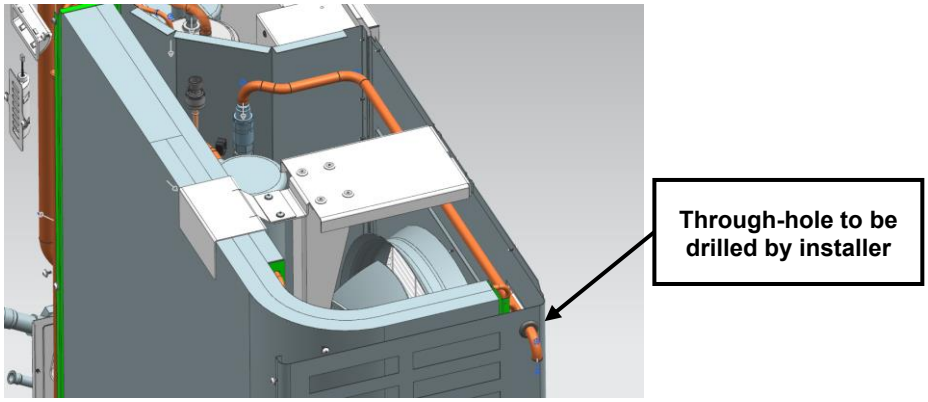

Figure 33: Example of pressure relief valve and discharge pipe configuration

4) Carry out a leak test to ensure that there is no leakage between the brazing joint of the PRV fitting and the end of the discharge pipe.

3.5 Location & fixings

WARNING
Creation of a dangerous atmosphere! Personal injuries! The unit should not be installed close to cellars and/or shafts (below ground level). There is a risk of accumulation of leaked refrigerant.

IMPORTANT
Dust and dirt contamination! Unit lifetime reduction! The unit should always be installed in a location that ensures clean airflow. External fouling of the condenser fins also leads to high condensing temperatures and will reduce the lifetime of the unit.

IMPORTANT
Sound emissions should be carefully considered when selecting the unit location. Installation in front of a wall will increase the acoustic pressure level by 3 dBA. Installation in a corner will increase the acoustic pressure level by 6 dBA.

It is recommended to maintain a clearance of 300 mm between the wall (or the next unit) and the unit left and rear panels whereas a clearance of 500 mm must be maintained from the unit right, top and front panels seen facing the front of the unit – see **Figures 34 & 35**. Both service access and airflow have been considered in making these recommendations.

Where multiple units are to be installed in the same location, the contractor needs to consider each individual case carefully. There can be many variations of unit quantities and available space and it is not the intention of this manual to go over these. However, in general terms, air by-pass around each condenser and between the units should be avoided at all times.

Ideally, the unit should be mounted level on a solid concrete slab with anti-vibration pads between unit feet and concrete. However, the ZX*Y refrigeration unit has also been designed for wall mounting on suitable brackets. In this case it is equally important that the dimensional guidelines given above are followed and that additional consideration is given for possible air recycling if units are installed one above the other. Wall mounting brackets are not part of the standard delivery.

Another factor to consider in finding a good installation site is the direction of the prevailing wind. For example, if the air leaving the condenser faces the prevailing wind, the airflow through the condenser can be impeded, causing high condensing temperatures and ultimately resulting in reducing the unit lifetime. A baffle is a remedy for this situation.

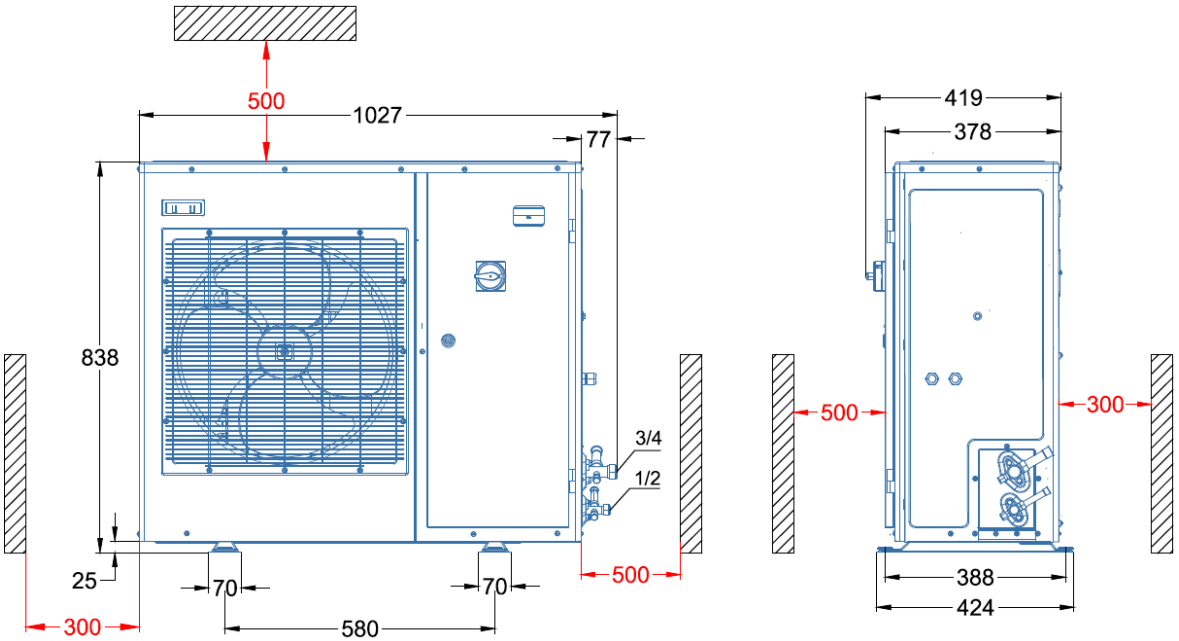

Figure 34: Fixing dimensions and distances – Single-fan units

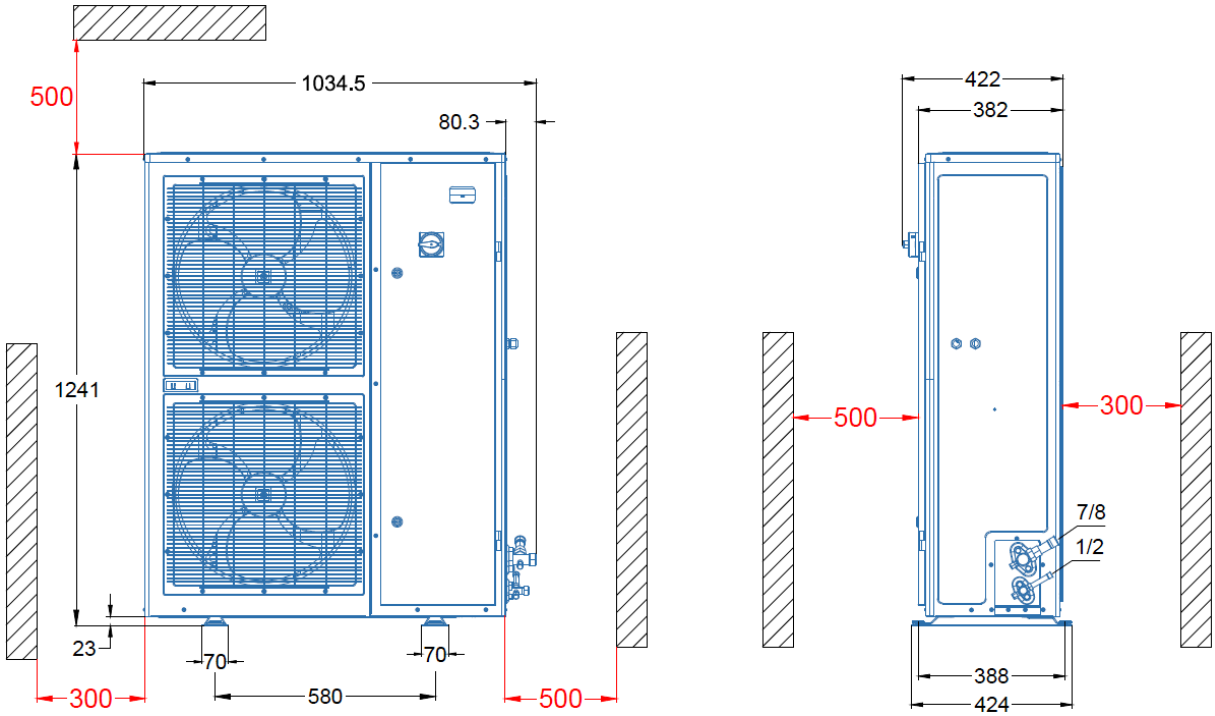

Figure 35: Fixing dimensions and distances – Dual-fan units

4 Start-up & operation



WARNING
Diesel effect! System explosion! The mixture of air and oil at high temperature can lead to an explosion. Avoid operating with air.



WARNING
Air/flammable refrigerant mixture! Creation of a flammable atmosphere! Make sure the atmosphere is non-flammable before starting the system. Ensure that the system contains only refrigerant and there is no flammable gas in the ambient.
Ensure proper ventilation according to the room volume and to the refrigerant charge.

4.1 Strength-pressure test



WARNING
High pressure! Personal injuries! Consider personal safety requirements and refer to test pressures prior to test.



IMPORTANT
System contamination! Bearing malfunction! Use only dry nitrogen for pressure testing. DO NOT USE other industrial gases.

***NOTE:* For more information please refer to the compressor application guidelines.**

4.2 System tightness test



WARNING
High pressure! Personal injuries! Consider personal safety requirements and refer to test pressures prior to test.



IMPORTANT
System contamination! Bearing malfunction! Use only dry inert gases (for example nitrogen) for leak testing. DO NOT USE other industrial gases.

Any later modification to compressor connections can have an impact on the compressor tightness. Always leak-pressure test the compressor after opening or modifying the connections.

The highest demands are placed on the leak-proof design of the installation and on the leak testing methods – please refer to EN 378.

4.3 Evacuation



CAUTION
Inadequate refrigerant charge! Compressor damage! Never energize the unit/controller without minimum refrigerant system charge. There is a risk of malfunction of the controller in deep vacuum operation which can cause compressor damage.

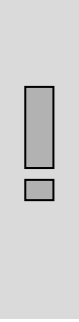

IMPORTANT
The evacuation procedure is based upon achieving an actual system vacuum standard and is NOT TIME DEPENDENT! The installation has to be evacuated with a vacuum pump before commissioning. Proper evacuation reduces residual moisture to 50 ppm. The installation of adequately sized access valves at the furthest point from the compressor in the suction and liquid lines is advisable. The system must be evacuated down to less than 3 mbar. If required break the vacuum with dry nitrogen. Pressure must be measured using a vacuum pressure gauge on the access valves and not on the vacuum pump. This serves to avoid incorrect measurements resulting from the pressure gradient along the connecting lines to the pump.

Before the installation is put into commission, it has to be evacuated with a vacuum pump. The vacuum pump and all tools have to be approved for A2L refrigerant/air mixture. The installation should be evacuated down to an absolute pressure of 3 mbar. Proper evacuation reduces residual moisture to 50 ppm. During the initial procedure, suction and discharge shut-off valves on the compressor remain closed. The installation of adequately sized access valves at the furthest point from the compressor on the suction and liquid lines is advisable. The pressure must be measured using a vacuum pressure gauge on the access valves and not on the vacuum pump; this serves to avoid incorrect measurements resulting from the pressure gradient along the connecting lines to the pump.

4.4 Charging procedure

4.4.1 Refrigerant charging procedure

WARNING
Air/A2L refrigerant mixture in a potentially flammable atmosphere! Fire hazard! Only use filling equipment designed and approved for use and operation with A2L refrigerant. Make sure all connections are tight to avoid leakage. Make sure to fill with pure A2L refrigerant.
Whenever starting up a system charged with A2L refrigerant, eg, after filling, repair, or maintenance, make sure not to start and operate accidentally in a flammable atmosphere.

CAUTION
Service valve closed! Compressor damage! Do not charge the unit with vapour (gas). The suction service valve must not be fully closed at any time when the compressor is running as it would cause damage to the compressor. This valve is provided for ease of connection and for the fitting of service gauges without removing the unit panel.

IMPORTANT
Inadequate refrigerant charge! Overheating! The scroll compressor design requires the system to be charged as quickly as possible with liquid refrigerant into the liquid line. This will avoid running the compressor under conditions whereby insufficient suction gas is available to cool not only the motor but also the scrolls. Temperature builds up very quickly in the scrolls if this is not done.

IMPORTANT
Absence of insulation on the liquid line in ZXLY*IE units! Air moisture condensation and lack of performance! Moisture will condensate on the liquid line and cause water droplets. The liquid line can pick up additional heat from the ambient which will adversely affect the subcooling desirable for the liquid refrigerant before it enters the expansion valve. Both the suction and liquid interconnecting piping between the unit and the evaporator should be insulated to avoid condensation.

IMPORTANT
Refrigerant leakage! Contamination of surroundings! In case of leakage the surrounding area can be contaminated with a mixture of oil and refrigerant. Periodically check the system for leakage.
Before charging or re-charging, the system must be leak- and pressure-tested with appropriate purging gas.

Ensure that the refrigerant system is grounded prior to charging with refrigerant.

Pre-charging must be done with liquid refrigerant through the service valve on the liquid line. It is advisable to pre-fill the suction side with a partial charge to avoid vacuum operation. Further charging can be done by carefully filling refrigerant through the suction line while simultaneously checking the sight glass.

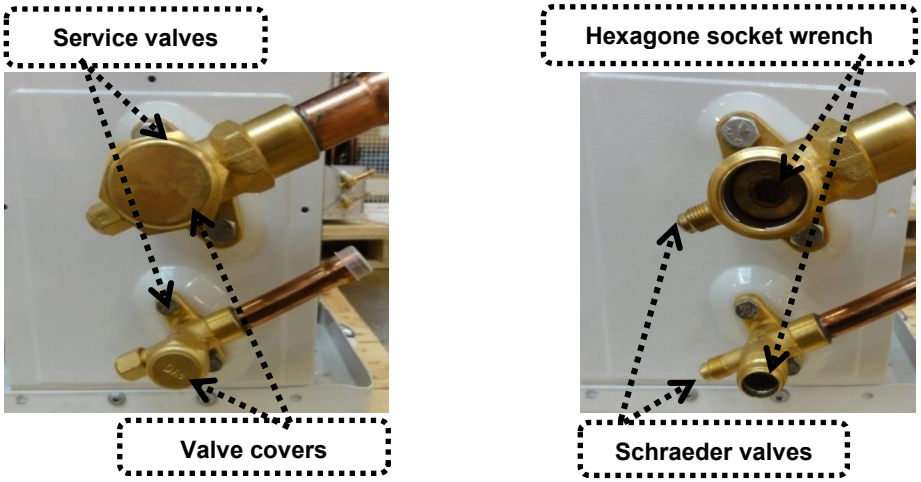

Figure 36: Service valves for refrigerant charging

The system charge varies from system to system and therefore must always be adapted to the required application. The refrigerant charge of the unit itself can be calculated approximately based on the following:

- One-fan units: 0.1 L + 3.28 L + 0.1 L = 3.48 L (condenser 10 % + receiver 80 % + liquid line 100 %)
- Two-fan units: 0.29 L + 4.72 L + 0.2 L = 5.21 L (condenser 10 % + receiver 80 % + liquid line 100 %)

The percentage values refer to the part of the refrigerant that is liquid in the particular component.

Extreme care shall be taken not to overfill the system with refrigerant. The system manufacturer/installer must respect the charge limitations according to valid standards, such as but not limited to EN 378.

***NOTE:* During the charging process on ZXLY units, the liquid line (outlet of the unit) temperature must be checked. The charging is sufficient when the liquid line temperature does not decrease significantly anymore and when the subcooling reaches approximately 25-35 K.**

***NOTE:* In order to meet the requirements of the Ecodesign Directive 2009/125/EC with regard to efficient system operation, ensure the refrigerant charge is sufficient.**

4.4.2 Oil charging procedure

Copeland ZX*Y refrigeration units are pre-charged with oil. After commissioning, the oil level should be checked and topped up if necessary.

As mentioned in **section 2.6.1 "Qualified refrigerants and oils"**, Copeland recommends charging with one of the following oil types:

- Emkarate RL32 3MAF
- Mobil EAL Arctic 22 CC

Charging is done through the Schraeder valve located on the suction line.

***NOTE:* The oil level should be approximately halfway up the sight glass.**

4.4.3 Oil separator

Some unit models are equipped with an oil separator – see **section 2.7 "BOM variations"**. The separator is pre-charged with 0.5 litre of oil.

4.5 Rotation direction of scroll compressors

Scroll compressors, like several other types of compressors, will only compress in one rotational direction. Direction of rotation is not an issue with single-phase compressors since they will always start and run in the proper direction. Three-phase compressors are protected against wrong rotation field by the unit controller.

4.6 Maximum compressor cycle

Maximum permitted starts per hour: 10. The factory setting of the XCM25D system controller already takes into account the maximum permitted starts and stops of the compressor and also controls running time and minimal downtime. It is recommended to change these settings only in exceptional cases.

4.7 Checks before starting & during operation



WARNING
Air/A2L refrigerant mixture in a potentially flammable atmosphere! Fire hazard! Whenever starting up a system charged with A2L refrigerant, eg, after filling, repair, or maintenance, make sure not to start and operate accidentally in a flammable atmosphere.



IMPORTANT
Liquid valves not fully opened! Liquid trap! Both valves should be fully opened on the liquid line in order to prevent liquid trapping.

Before a system runs for the first time:

- Check that the valves on the liquid line are fully opened.
- Set the essential parameters of the electronic controller in the programming level 1 (refrigerant type, compressor cut-out/cut-in settings (ZXDY only), fan setpoint….) according to the required application.
- Carry out visual inspection.
- Perform control tests to ensure all controls operate correctly, including any manual backup system (if applied).

- Check also the following:
  - ✓ Documentation for the system and its marking, especially pressure equipment.
  - ✓ Installation of safety devices.
  - ✓ Compressor oil level.
  - ✓ Pressure test records.
  - ✓ All valves open/closed as required for operation.

After start-up and when operation conditions have stabilised:

- It is recommended to check the oil level in the compressors and to add oil if necessary to ensure a sufficient oil level.
- The following should also be checked:
  - ✓ Fan rotation.
  - ✓ Refrigerant charge.
  - ✓ Expansion valve superheat.

4.8 Pressure fluctuations in case of digital unit

Digital scroll compressors are capable of capacity modulation. A normally closed (de-energized) solenoid valve is a key component for achieving modulation. When the solenoid valve is energized, the two scroll elements move apart axially into the unloaded state. In this state, the compressor motor continues running, but there is no compression. Within scroll modulation the suction and the discharge pressure could fluctuate. During the unloaded state, the discharge pressure will decrease and the suction pressure will increase. This normal pressure fluctuation has no observable effect on the reliability of the compressor or system components. However, the installation and setting of pressure controls should take this into account.

4.9 Pumpdown cycle



WARNING
Vacuum operation! Creation of a flammable mixture! Fire hazard! During operation in vacuum a flammable mixture can form inside the system. Extreme attention shall be paid to system tightness. Prevent ambient air from entering the system.

The system pressure shall not be allowed to go down below the pressure values shown in **section 2.10.4 "Main control & safety features"**. If this happens, immediately stop the unit and/or de-energize the power supply of the unit.

Please also refer to the application envelopes which can be found in Select software, available at www.copeland.com/en-gb/tools-resources.

5 Maintenance & repair

5.1 General considerations



WARNING
Conductor cables! Electrical shock hazard! Follow the lock-out/tag-out procedure and the national regulations before undertaking any maintenance or service work on the system.
Screwed electrical connections must be used in all applications. Refer to original equipment wiring diagrams. Electrical connections must be made by qualified electrical personnel.



WARNING
Ignition source in a potentially flammable atmosphere! Fire hazard! When opening the system, the atmosphere could be flammable. All the electrical components that are a source of ignition must always be switched off during service and maintenance. Ensure that the surface temperatures of the components never exceed the limits set by the applicable safety standard, eg, EN 378-2.
Air/flammable refrigerant mixture! Fire hazard! Remove all the refrigerant before opening the system. Make sure to remove the refrigerant completely from all components such as heat exchangers, refrigerant accumulators, etc. Flush the system and the components with inert gas before undertaking any work and before brazing.



WARNING
Open flame in a potentially flammable atmosphere! Fire hazard! The area shall be checked with an appropriate refrigerant detector prior to and during work, to ensure the technician is aware of a potentially toxic or flammable atmosphere. Ensure that the leak detection equipment being used is suitable for use with all applicable refrigerants.
Personnel performing work on a refrigeration system that involves exposing the pipework shall avoid using any ignition source in a way that could lead to a fire hazard. All sources of ignition shall be kept sufficiently far from the site of installation, repair, removal or disposal during the entire time when refrigerant could be released into the surrounding space.
Open flames and smoking are strictly forbidden at all times.
In case of failure, switch the unit off remotely via the additional circuit breaker if available.

A risk analysis to evaluate all possible risks shall be carried out by the service technician before any repair work.

5.2 Qualification of workers



CAUTION
Non-qualified personnel! Improper maintenance! Only qualified and trained personnel can service or undertake work on units using flammable refrigerant.

Personnel working on the maintenance, repair and decommissioning of the system shall be adequately trained. Any work procedure affecting safety shall only be executed by qualified and trained personnel in compliance with national or other equivalent certification systems. Examples of such work procedures are breaking into the refrigerating circuit, opening sealed components, opening ventilated enclosures, etc…

5.3 Preparation and work procedure

A work procedure shall be provided in the preparation stage. All personnel working at the site, whether maintenance or other, shall be instructed on the nature of the work being carried out.

If any work is to be conducted on the refrigeration systems or any associated parts, appropriate fire extinguishing equipment shall be provided. Dry powder or CO_2 fire extinguishers are considered appropriate. Confirm that appropriate fire extinguishing equipment is available near the work area.

Prior to starting to work on systems containing flammable refrigerants, safety checks are necessary to ensure that the risk of ignition is minimized.

Work shall be undertaken under a controlled procedure so as to minimize the risk of a flammable gas or vapour being present while the work is being performed.

Avoid working on systems filled with flammable refrigerant in a confined space.

5.4 Disassembling system components

When disassembling system components the recommendations below shall be followed:

- Recover refrigerant and evacuate system using an A2L-dedicated recovery unit and vacuum pump. All the refrigerant shall be recovered to avoid significant release. Ensure that the outlet of the vacuum pump is not close to any potential ignition source and that ventilation is available.
- Flush system with inert gas (dry nitrogen). Compressed air or oxygen shall not be used for purging refrigerant systems.
- Disassemble components with a cutting tool.

5.5 Replacing a compressor

WARNING
Air/A2L refrigerant mixture! Fire hazard! Use suitable recovery unit and recycling bottles also for oil disposal as A2L refrigerant may still be solved in the oil.
For systems using flammable A2L refrigerant, it is mandatory to flush oxygen-free nitrogen through the piping during the brazing process.

CAUTION
Inadequate lubrication! Bearing destruction! Exchange the accumulator after replacing a compressor with a burned-out motor. The accumulator oil return orifice or screen may be plugged with debris or may become plugged. This will result in starvation of oil to the new compressor and a second failure.
Remove refrigerant and oil completely from the replaced compressor.

When replacing an A2L-refrigerant compressor, the oil has to be drained out of the compressor and the compressor should be flushed with dry nitrogen. DO NOT close the stubs with plugs.

In case of motor burnout, most of the contaminated oil will be removed with the compressor. The rest of the oil is cleaned through the use of suction and liquid line filter-dryers. A 100 % activated alumina filter-dryer is recommended for the suction line. It must be removed after 72 hours.

It is highly recommended that the suction accumulator be replaced if the system contains one. This is because the accumulator oil return orifice or screen may be plugged with debris or may become plugged shortly after a compressor failure. This will result in starvation of oil to the replacement compressor and a second failure.

When a compressor is exchanged in the field, it is possible that a large portion of the oil remains in the system. While this may not affect the reliability of the replacement compressor, the extra oil will add to rotor drag and increase power usage.

- De-energize the refrigeration unit before any intervention.
- Close valves to isolate the unit from the system.
- Recover the refrigerant from the unit.
- Drain, recover and dispose of compressor oil as appropriate.
- Make sure that the compressor is not under pressure.
- Release the compressor mounting parts then lift the compressor and replace it with the new one.

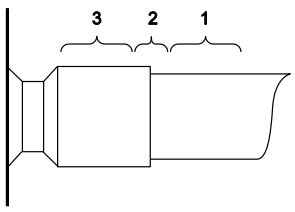

Figure 37: Tube connecting areas

To disconnect:

- Using a pipe cutting tool, cut off the suction and discharge lines in such a manner that the new compressor can easily be re-connected into the system.
- Heat joint areas 2 and 3 slowly and uniformly until the braze material softens and the tube end can be pulled out from the fitting.

To reconnect:

- See **section 3.2.3 "Brazing procedure"**.
- Recommended brazing material: Silfos with minimum 5 % silver or silver braze used on other compressors.

***NOTE:* Due to the different thermal properties of steel and copper, brazing procedures may have to be changed from those commonly used.**

***NOTE:* For more detailed instructions, please refer to the compressor application guidelines.**

5.6 Exchanging the refrigerant

WARNING
Air/A2L mixture in a potentially flammable atmosphere! Fire hazard! In any case avoid air/A2L mixture in the refrigeration system. Make sure that the system is filled with pure A2L refrigerant. In the event that the refrigerant needs replacing, the charge should be recovered using A2L-qualified refrigerant recovery unit and recycling bottles.

For qualified refrigerants and oils, see **section 2.6.1**.

5.7 Replacing the crankcase heater

WARNING
Ignition source in a potentially flammable atmosphere! Fire hazard! The crankcase heater is not an ignition source during normal operation in an A2L system but could become one if not installed properly according to installation instructions. Ensure correct electrical and mechanical installation.

CAUTION
Overheating and burnout! Compressor damage! Never apply power to the crankcase heater in free air, before the crankcase heater is installed on the compressor or when it is not in complete contact with the compressor shell.

NOTE: **Please refer to the Copeland spare parts catalogue available at www.copeland.com/en-gb/tools-resources to select the correct crankcase heater model.**

Caution: Crankcase heaters must be properly grounded!

For the replacement of the crankcase heater, the manufacturer/installer shall follow the recommendations mentioned below.

Assembly instructions

- Choose the appropriate model according to compressor size and required wattage.
- Check the compressor application guidelines for crankcase heater connection and operation.
- Position the crankcase heater between the lower cover and the lower bearing weld projection **(Fig. 38)**.
- Fit the heater horizontally around the crankcase, ensuring that it is in close contact with the compressor housing along the entire length.
- Avoid having the heating portion of the heater in contact with any weld projection **(Fig. 39 & 40)**.
- Avoid having the assembly heater inclined **(Fig. 41)**.
- Close the lock and tighten the screw, torque: 2-3 Nm.
- The excess clamp bracket may be trimmed. Sharp edges must not come into contact with wires.
- The presence of the heater shall be made evident by the posting of caution signs or markings at appropriate locations.



Figure 38



Figure 39



Figure 40



Figure 41

Electrical connection

- Connect the crankcase heater according to the compressor application guidelines.
- The crankcase heater must be connected only to its rated voltage.
- The metal braid of the heater must be connected to a suitable earthing terminal.
- Check the resistance according to the technical data.
- Perform an insulation test before start-up.
- Electrical security and safety measures are to be provided on site.

5.8 Electrical terminations

WARNING
Isolating switch "On"! Electrical shock hazard! Turn off the main power supply to de-energise the unit before undertaking any task on the electrical equipment.

All refrigeration units will generate some degree of vibration. Copeland ZX*Y units are no exception. However, the vibration level from the compliant scroll technology is less severe than in units using reciprocating compressor technology. Thanks to this reduced vibration, these units can be mounted on simple, less expensive rubber mounting pads.

Nevertheless, over time, due to the slight vibrations and to temperature fluctuations within the unit housing, electrical terminations might become loose. The components most likely to be affected are the main terminal strip and the compressor contactor. It is suggested to check all the electrical terminations for tightness and to carry out a visual inspection of both the low voltage crimped terminals and the rubber gasket around the cabinet at least once every 6 months.

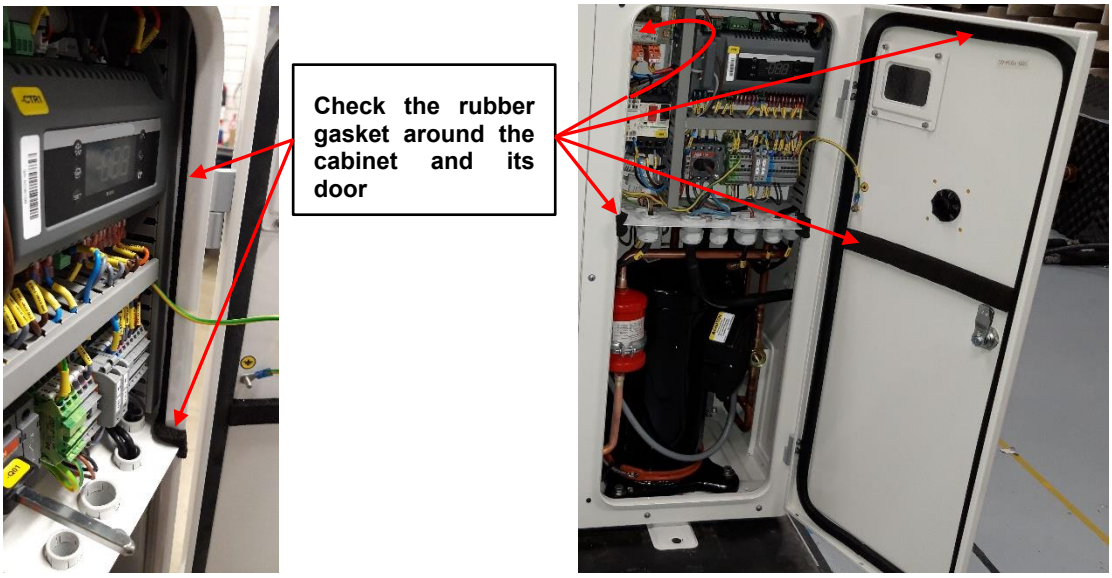

Figure 42: Visual inspection of the rubber gasket

5.9 Condenser fins

CAUTION
Acid cleaning! Corrosion of condenser fins! Do not use acidic solutions to clean the coil. After cleaning, the fins should be brushed lightly with a proper fin comb.

Condenser fins become dirty over time as ambient air is induced to the condenser. Dirty coil surfaces result in high condensing temperatures and poor unit performance. Regular cleaning is recommended, the frequency of doing so being dependent on the installation and the surrounding environment. As a general guide it is advisable to do this at least once every two months.

As a general rule and for a clean environment Copeland recommends that the fins be cleaned with liquid detergent diluted with clean water. The ZX*Y unit has a well-designed chassis with levels sloping towards a large drainage hole and provided the unit is installed level, any cleaning solution should be able to drain away. A light brush downwards (in the direction of the fins) should be done before washing to remove heavy deposits.

***NOTE:* In order to meet the requirements of the Ecodesign Directive 2009/125/EC with regard to efficient system operation, ensure the heat exchangers remain clean at all times.**

5.10 Routine leak testing

All joints inside the system should be leak-tested as part of a regular maintenance schedule. The checking frequency is described in standard EN 378-4, Annex D. Copeland recommends checking the system tightness at least every 6 months.

***NOTE:* In order to meet the requirements of the Ecodesign Directive 2009/125/EC with regard to efficient system operation, ensure the refrigerant and oil charges are sufficient.**

5.11 Condenser fans & motors

A yearly inspection of these items is recommended. Fastenings can become loose, bearings may wear and fans may require cleaning of solid deposits that can cause rotational imbalance.

Motors come with lifelong lubrication bearings that do not require lubricating on a routine basis, but just need to be checked for wear.

6 Certification & approval

- Copeland ZX*Y refrigeration units comply with the Low Voltage Directive LVD 2014/35/EU. The compliance is verified through harmonized standards:
  - EN 60335-1: Household and similar electrical appliances – Safety, General Requirements.
  - EN 60335-2-40: Household and similar electrical appliances – Safety, Particular requirements for electrical heat pumps, air-conditioners and dehumidifiers.
  - EN 60335-2-89: Household and similar electrical appliances – Safety, Particular requirements for commercial refrigerating appliances with an incorporated or remote refrigerant condensing unit or compressor.
- Copeland ZX*Y refrigeration units comply with the Electromagnetic Compatibility Directive EMC 2014/30/EU. The compliance is verified through harmonized standards:
  - EN 55014-1: Electromagnetic compatibility – Requirements for household appliances, electric tools and similar apparatus, Emission.
  - EN 61000-3-2: Electromagnetic compatibility (EMC) Part 3-2: Limits – Limits for harmonic current emissions (equipment input current ≤ 16 A per phase).
  - EN 61000-3-3: Electromagnetic compatibility (EMC) Part 3-3: Limits – Limitation of voltage changes, voltage fluctuations and flicker in public low-voltage supply systems, for equipment with rated current ≤ 16 A per phase and not subject to conditional connection.
  - EN 61000-6-2: Electromagnetic compatibility (EMC) Part 6-2: Generic standards – Immunity standard for industrial environments.
  - EN 61000-6-3: Electromagnetic compatibility (EMC) Part 6-3: Generic standards – Emission standard for residential, commercial and light-industrial environments.
- The Copeland ZX*Y refrigeration units and their piping comply with the Pressure Equipment Directive PED 2014/68/EU. Applied harmonized standards:
  - EN 378-2: Refrigerating systems and heat pumps – Safety and environmental requirements Part 2: Design, construction, testing, marking and documentation.
- The Copeland ZX*Y refrigeration units and their associated spare parts and accessories comply with the Directive RoHS 2011/65/EU, (EU) 2015/863 on the Restriction of the use of certain Hazardous Substances in electrical and electronic equipment (recast).
- Conformity Declarations for components are available as far as required.
- The Manufacturer's Declaration of Incorporation has to be respected when incorporating these products into a machine.

7 Dismantling & disposal



Removing oil and refrigerant:

- **Do not disperse in the environment.**
- **Use the correct equipment and method of removal.**
- **Dispose of oil and refrigerant in accordance with national legislation and regulations.**

Dispose of compressor and/or unit in accordance with national legislation and regulations.

*Appendix 1: Overview of the ZX*Y unit components*

Components	Medium temperature		Low temperature	
	Standard ZXMY	Digital ZXDY	Standard ZXLY	ZXLY with EVI
Compressor M1	✓	✓	✓	✓
Fan M2.1	✓	✓	✓	✓
Fan M2.2	ZXMY-050E – ZXMY-075E	ZXDY-050E – ZXDY-075E	-	ZXLY-060IE & ZXLY-075IE
Y1 Expansion valve EVI	Not used	Not used	Not used	✓
Y2 Solenoid valve (digital compressor)	-	✓	-	-
Y3 Solenoid valve liquid line	Optional	Optional	Optional	Optional
E1 Crankcase heater	✓	✓	✓	✓
S1 High-pressure switch	✓	✓	✓	✓
S2 Low-pressure switch	-	-	-	-
S3 Room thermostat (optional)	-	-	-	-
B1 Pressure transducer suction	✓	✓	✓	✓
B2 Pressure transducer discharge	✓	✓	✓	✓
B3 DLT NTC discharge	✓	✓	✓	✓
B4 EVI vapour in sensor NTC	Not used	Not used	Not used	✓
B5 EVI vapour out sensor NTC	Not used	Not used	Not used	✓
B6 Ambient temperature sensor NTC	✓	✓	✓	✓
B7 Temperature sensor (optional)	-	-	-	-

Table 36: Overview of the ZX*Y unit components

*Appendix 2: Wiring diagram – ZXMY & ZXLY*E standard units (380-420 V / 3 Ph / 50 Hz)*

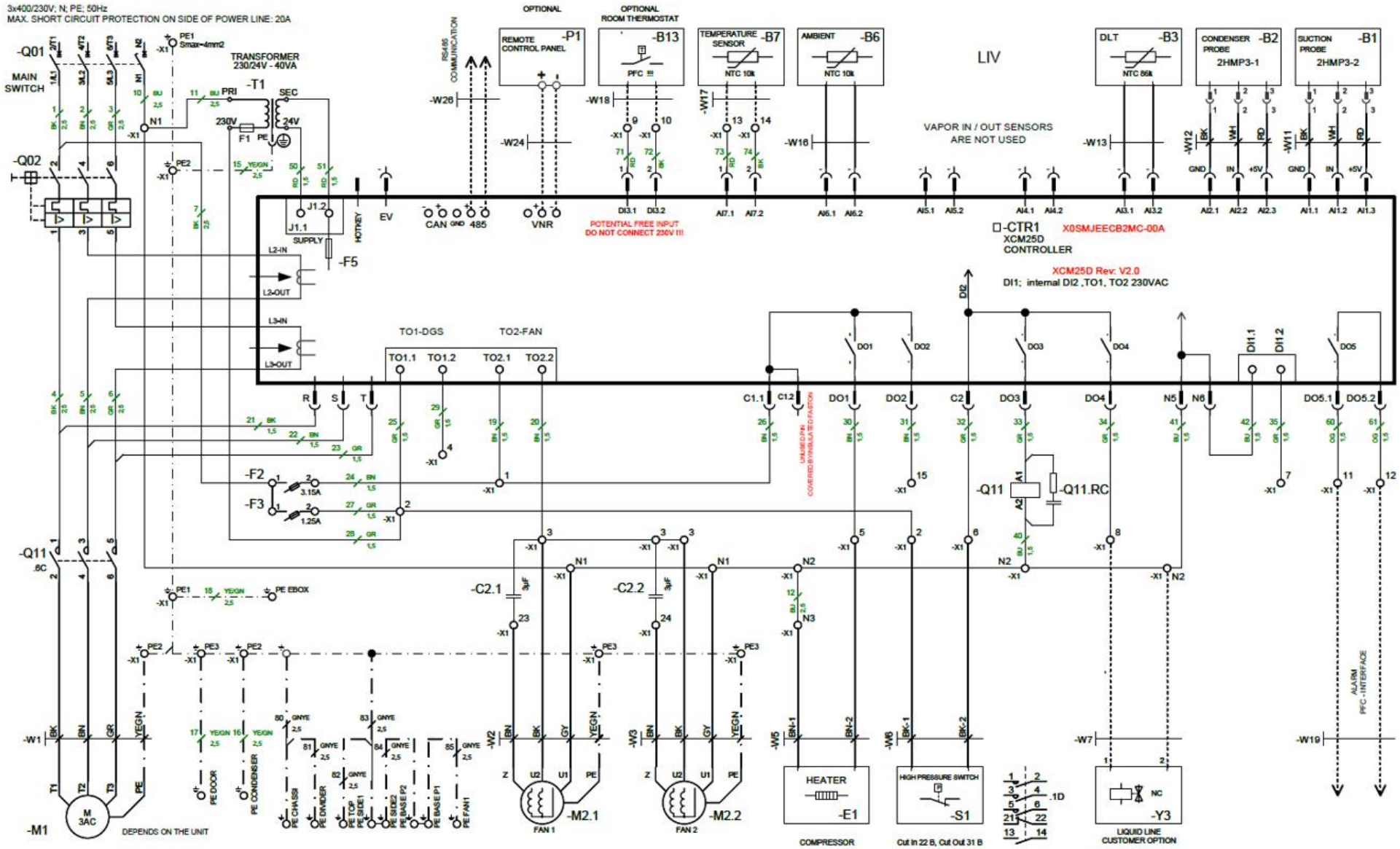

Figure 43: Wiring diagram – ZXMY & ZXLY*E units

Appendix 3: Wiring diagram – ZXLY*IE (EVI) units (380-420 V / 3 Ph / 50 Hz)

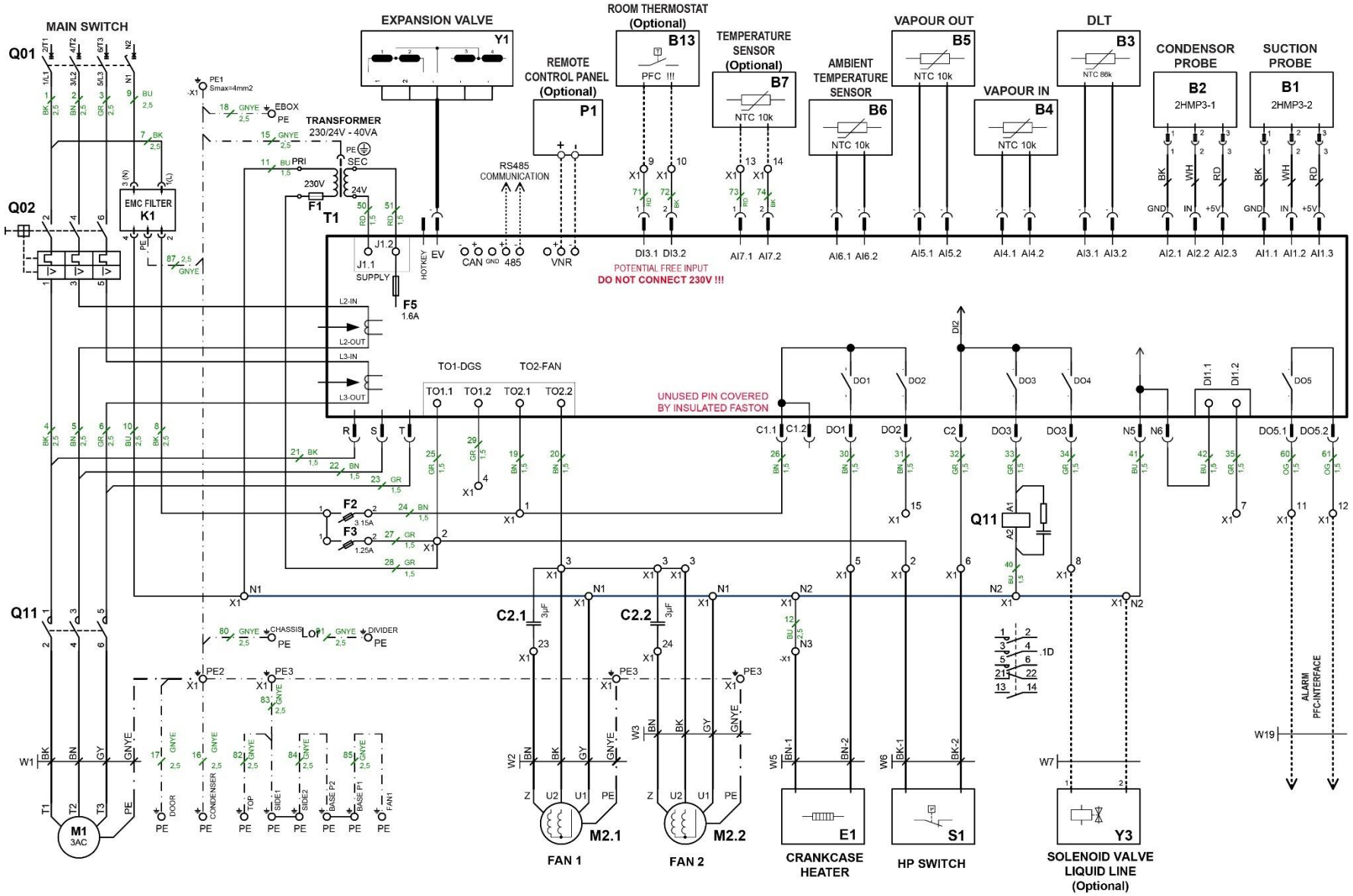

Figure 44: Wiring diagram – ZXLY*IE units

Appendix 4: Wiring diagram – ZXDY units (380-420 V / 3 Ph / 50 Hz)

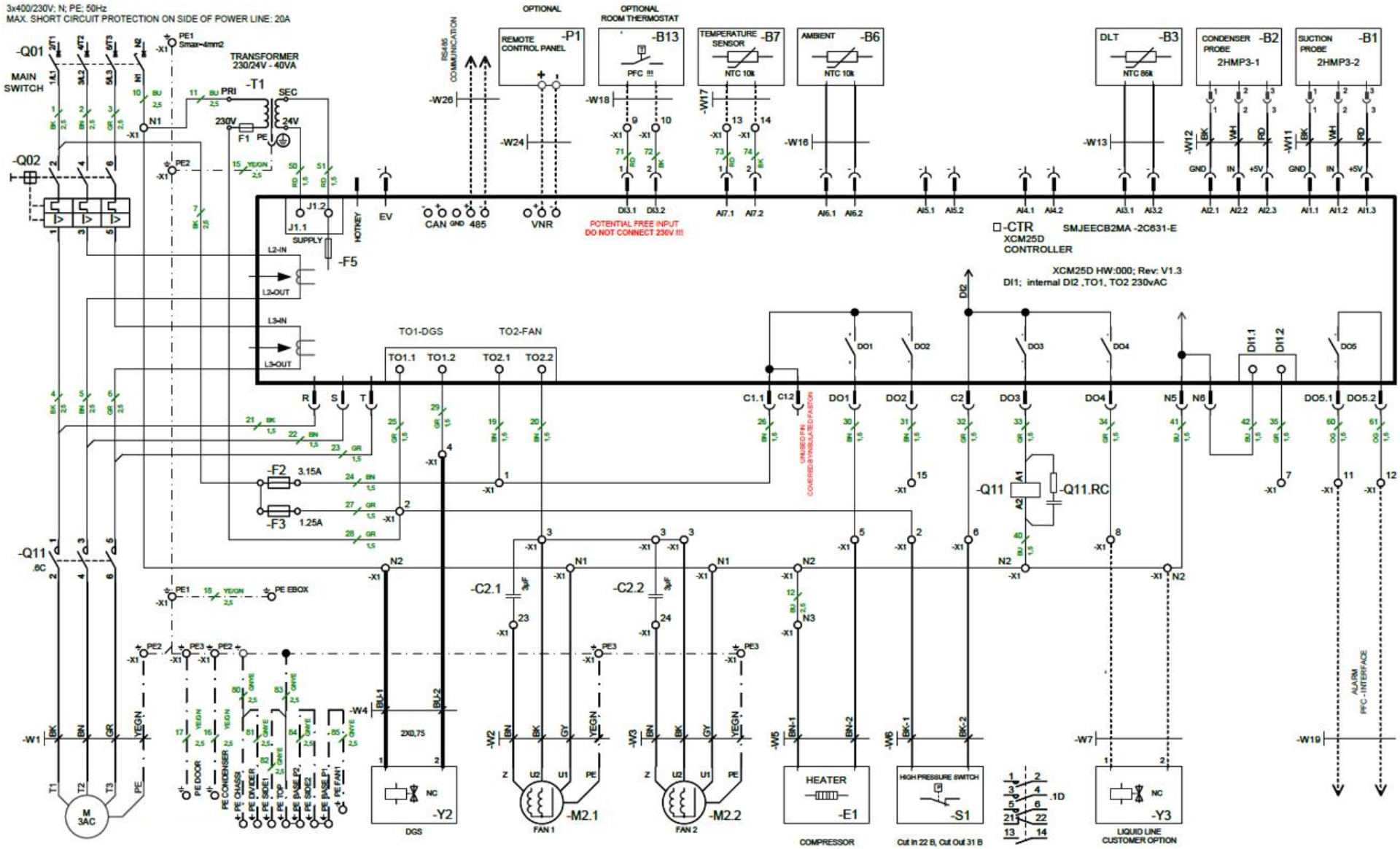

Figure 45: Wiring diagram – ZXDY units

Appendix 5: Parameters level 1

Legend

L1 = Parameter in level 1 (without password)

L2 = Parameter in level 2 (with password = 3 2 1)

N.V. = Parameter not accessible

***NOTE:* When changing parameters C01, C02 and C05 a reset of the controller (interruption of power supply) is required.**

Parameter	Description	Range	ZXMY	ZXDY	ZXLY
C01	Compressor cut-in pressure setpoint	CoU to US; C02 to C04	L1	L2	L1
C02	Compressor cut-out pressure setpoint	LS to Cin; C03 to C01	L1	L2	L1
C07	Refrigerant selection for regulation	R404A (0-404), R507A (1-507), R134a (2-134), R22 (3-R22), R407C (4-07C), R407A (5-07A), R407F (6-07F), R448A (7-48A), R449A (8-49A), R454C (10-54C), R455A (11-55A), R454A (12-54A), R1234yf (13-123)	L1	L1	L1
C16	Digital compressor setpoint	LS to US; C03 to C04	N.V.	L1	N.V.
C17	Proportional band for compressor regulation	0.1 to 9.9 bar; 0.1 to 99.9 PSI; 1 to 999 KPA; 0.1 to 25.5 °C	N.V.	L1	N.V.
C21	Cycle time for digital compressor	10 to 40 sec	N.V.	L1	N.V.
C24	Minimum capacity for digital compressor	0 to PMA; 0 to C25	N.V.	L1	N.V.
C25	Maximum capacity for digital compressor	PMi to 100; C24 to 100	N.V.	L1	N.V.
D29	Low-pressure alarm value	0 to 15 bar	L1	L1	L1
E39	Condenser temperature setpoint when fan setpoint modulation is disabled	-40 to 110 °C	L1	L1	L1
E46	Regulation band of variable fan	0.1 to 25.5 °C	L1	L1	L1
N01	Current minute	0 to 59	L1	L1	L1
N02	Current hour	0 to 23	L1	L1	L1
N03	Date of month	1 to 31	L1	L1	L1
N04	Month	1 to 12	L1	L1	L1
N05	Year	0 to 99	L1	L1	L1
T18	Access to Pr2 level	(0÷999)	L1	L1	L1

Table 37: Parameters level 1

Appendix 6: Alarm menu

Code	Description	Cause	Action	Reset
E01	AI1 error (Probe 1 / Suction pressure transducer failure alarm)	Probe failure or out of range	Only in digital units – Compressor activated according to C23; compressor on & off times set according to D02 & D03	Automatically as soon as the probe restarts working.
E02	AI2 error (Probe 2 / Discharge pressure transducer failure alarm)	Probe failure or out of range	The fan speed control is disabled	Automatically as soon as the probe restarts working.
E03	AI3 error (Probe 3 / Discharge line temperature sensor failure alarm)	Probe failure or out of range	The discharge temperature control is disabled	Automatically as soon as the probe restarts working.
E04	AI4 error (Probe 4 / Temperature sensor failure alarm)	Probe failure or out of range		Automatically as soon as the probe restarts working.
E05	AI5 error (Probe 5 / Temperature sensor failure alarm)	Probe failure or out of range		Automatically as soon as the probe restarts working.
E06	AI6 error (Probe 6 / Ambient temperature sensor failure alarm)	Probe failure or out of range	The functions related to probe 6 (ambient temperature sensor) are disabled	Automatically as soon as the probe restarts working.
E07	AI7 error	Probe failure or out of range		Automatically as soon as the probe restarts working.
E08	Battery error			
E09	Current sensor 1 error	Probe out of range	The functions related to the current sensor are disabled	Automatically as soon as the probe restarts working.
E10	Current sensor 2 error	Probe out of range	The functions related to the current sensor are disabled	Automatically as soon as the probe restarts working.
E11	Voltage sensor 1 error	Probe out of range	The functions related to the voltage sensor are disabled	Automatically as soon as the probe restarts working.
E12	Voltage sensor 2 error	Probe out of range	The functions related to the voltage sensor are disabled	Automatically as soon as the probe restarts working.
E13	Voltage sensor 3 error	Probe out of range	The functions related to the voltage sensor are disabled	Automatically as soon as the probe restarts working.
E14-E19	*Reserved*			
E20	Lost phase error	Power supply phase loss	The compressor will trip	Automatically: lost phase recovered and H08 delay elapsed. If all three phases are present but the controller still shows the error message, set parameters H06 and H25 to "No".
L20	Lost phase lockout	Power supply phase loss happened H12 times within one hour	The compressor will lock out	Hold "start" button for 5 sec or manual power off and on. If all three phases are present but the controller still shows the error message, set parameters H06 and H25 to "No".

Code	Description	Cause	Action	Reset
L21	Phase sequence lockout	Incorrect phase sequence	The compressor will lock out, rotation field has to be changed	Manual power off, invert 2 phases and power on. If the phase sequence is correct but the controller still shows the error message, set parameter H25 to "No".
E22	Phase imbalance	One phase voltage lower than H18 % of 3 phases average voltage	The compressor is activated according to H19	Automatically: voltage recovered and H16 delay elapsed. If all three phases are present but the controller still shows the error message, set parameter H06 to "No".
E23	Overcurrent	Electrical current larger than H09 setting	The compressor will trip	Automatically: H08 delay elapsed. If the current is within the limits but the controller still shows the error message, set parameter H06 to "No".
L23	Overcurrent lockout	Overcurrent happened H11 times within one hour	The compressor will lock out (if H11 = 0, no compressor lockout)	Hold "start" button for 5 sec or manual power off and on (if H11 = 0, compressor automatically starts after H08 delay elapsed). If the current is within the limits but the controller still shows the error message, set parameter H06 to "No".
E26	Undervoltage alarm	Voltage lower than H13 setting for H15 seconds	The compressor will trip	Automatically: voltage is back within acceptable range and H16 delay elapsed. If the voltage corresponds to the required voltage but the controller still shows the error message, set parameter H06 to "No".
L26	Undervoltage lockout	Undervoltage happened H17 times within one hour	The compressor will lock out (if H17 = 0, no compressor lockout)	Hold "start" button for 5 sec or manual power off and on (if H17 = 0, compressor automatically starts when voltage is back within acceptable range and H16 delay elapsed). If the voltage corresponds to the required voltage but the controller still shows the error message, set parameter H06 to "No".
E27	Overvoltage alarm	Voltage higher than H14 setting for H15 seconds	The compressor will trip	Automatically: voltage is back within acceptable range and H16 delay elapsed. If the voltage corresponds to the required voltage but the controller still shows the error message, set parameter H06 to "No".
L27	Overvoltage lockout	Overvoltage happened H17 times within one hour	The compressor will lock out (if H17 = 0, no compressor lockout)	Hold "start" button for 5 sec or manual power off and on (if H17 = 0, compressor automatically starts when voltage is back within acceptable range and H16 delay elapsed). If the voltage corresponds to the required voltage but the controller still shows the error message, set parameter H06 to "No".

Code	Description	Cause	Action	Reset
E28	Compressor built-in thermal protector trip	High motor temperature	Warning signal only	Automatically: as soon as electrical current is detected. Check the voltage coming to the compressor.
E30	Main power lost	Controller power supply lost		
E40	High-pressure switch alarm	High-pressure switch open	The compressor will trip	Automatically: high-pressure switch closed and D14 delay elapsed. If the high pressure is below the limit but the alarm is still on, check fuse F3.
L40	High-pressure switch lockout	High-pressure switch open error happened D15 times within one hour	The compressor will lock out (if D15 = 0, no compressor lockout)	Hold "start" button for 5 sec or manual power off and on (if D15 = 0, compressor automatically starts when high-pressure switch is closed and D14 delay elapsed). If the high pressure is below the limit but the alarm is still on, check fuse F3.
E41	Low-pressure switch alarm	Low-pressure switch open	The compressor will trip	Automatically: low-pressure switch closed and D28 delay elapsed.
E43	Low pressure alarm	The pressure is below D29	Warning signal only	To deactivate the alarm function set parameter D13 to "No".
E44	Discharge line temperature alarm	Discharge line temperature higher than D22 for D24 seconds	The compressor will trip	Automatically: discharge line temperature lower than D23 setting and D25 delay elapsed.
L44	Discharge line temperature lockout	Discharge line temperature overheat happened D26 times within one hour	The compressor will lock out (if D26 = 0, no compressor lockout)	Hold "start" button for 5 sec or manual power off and on (if D26 = 0, compressor automatically starts when discharge line temperature is lower than D23 setting and D25 delay elapsed).
E45	High condenser pressure alarm	Condenser pressure higher than E58 for E59 minutes	The compressor is activated according to E60	Automatically: as soon as condenser pressure is lower than E61.
E46	High condenser temperature alarm	Condenser temperature higher than E58 for E59 minutes	The compressor is activated according to E60	Automatically: as soon as condenser temperature is lower than E61.
E47	EXV fully open in EVI	EXV fully open for F40 minutes	Warning signal only	Automatically: as soon as EXV is not at maximum steps.
E48	Refrigerant shortage error in EVI	EXV fully open and PHE superheat higher than (F 9…/ 7 + 9) (F 9…/ 7 epends on refrigerant type)	Warning signal only	Automatically: as soon as PHE superheat is lower than (F 9…/ 7 + 39).
E49	*Pumpdown alarm*	*Not used*		

Code	Description	Cause	Action	Reset
E50	High side floodback alarm	The differential temperature between discharge and mid-coil is lower than H21 for accumulated H22 minutes in H23 minutes	Warning signal only	Automatically: as soon as differential temperature between discharge and mid-coil is higher than H21 for H24 minutes.
E60	*Max pressure alarm of superheating*	*Not used*		
E61	*Min pressure alarm of superheating*	*Not used*		
E62	*High superheating alarm*	*Not used*		
E63	*Low superheating alarm*	*Not used*		
E64	*High room temperature alarm*	*Not used*		
E65	*Low room temperature alarm*	*Not used*		
E66	Open door alarm	If the door is open longer than G53	Warning signal only if G09 = "no"; Alarm and compressor trip if G09 = "yes".	Manual or automatic – see Action.
E67-E79	*Reserved*			
E80	rtC warning, date error	HW problem in the board	Replace the controller	
E81	rtC warning, communication error	HW problem in the board	Replace the controller	
E82	Probe configuration error			
E83	DI configuration error			
E84	Compressor configuration error			
E85	Injection probe configuration error	Injection EXV output mode is selected, but no relevant sensors	Injection EXV will not work	Automatically: as soon as the injection EXV is properly configured.
E86	EEPROM R/W error (manual)	HW problem in the board	Replace the controller	
E87-E99	*Reserved*			

Table 38: Alarm code overview

Appendix 7: Additional features for customization

Required setting for proper functionality	Setting needs to be adjusted according to application

Room thermostat or pressure switch (not available on ZXDY units) System restart is required!			
Parameter	**Parameter description**	**Factory setting**	**Required setting**
C05	Compressor regulation probe selection	SuP = Suction pressure probe	dIS = Suction pressure switch / Room thermostat
R07	Digital input 3 configuration	nu = Not used	SuS = Suction pressure switch / Room thermostat

Temperature sensor in case temperature System restart is required!			
Parameter	**Parameter description**	**Factory setting**	**Required setting**
A19	Probe 7 configuration	nu = Not used	tnt = Thermostat temperature
C05	Compressor regulation probe selection	SuP = Suction pressure probe	CSt = Case temperature
G01	Case temperature probe selection	nu = Not used	tnt = Thermostat temperature
G02	Cut-out temperature	+2 °C	Adjust to application requirements
G03	Positive differential defines upper cut-in temperature	1 K	Adjust to application requirements

Pumpdown with room thermostat (not available on ZXDY units) System restart is required!			
Parameter	**Parameter description**	**Factory setting**	**Required setting**
C05	Compressor regulation probe selection	SuP = Suction pressure probe	dIS = Suction pressure switch / Room thermostat
G56	Use of the liquid line solenoid	No	Yes
R07	Digital input 3 configuration	nu = Not used	SuS = Suction pressure switch / Room thermostat
R08	Digital input 3 polarity	CL = Closed	CL = Closed
S07	Relay output 4	nu = Not used	LLS = Liquid line solenoid
C01	Compressor cut-in pressure setpoint	2.7/0.4 bar rel	Adjust to application requirements
C02	Compressor cut-out pressure setpoint	1.1/0.1 bar rel	Adjust to application requirements

Pumpdown with temperature sensor in case temperature (not available on ZXDY units) System restart is required!			
Parameter	**Parameter description**	**Factory setting**	**Required setting**
A19	Probe 7 configuration	nu = Not used	tnt = Thermostat temperature
C05	Compressor regulation probe selection	SuP = Suction pressure probe	CSt = Case temperature
G01	Case temperature probe selection	nu = Not used	tnt = Thermostat temperature
G56	Use the liquid line solenoid	No	Yes
S07	Relay output 4	nu = Not used	LLS = Liquid line solenoid
C01	Compressor cut-in pressure setpoint	2.7/0.4 bar rel	Adjust to application requirements
C02	Compressor cut-out pressure setpoint	1.1/0.1 bar rel	Adjust to application requirements
G02	Cut-out temperature	+2 °C	Adjust to application requirements
G03	Positive differential defines upper cut-in temperature	1 K	Adjust to application requirements

Defrost with time intervals System restart is required!			
Parameter	**Parameter description**	**Factory setting**	**Required setting**
A19	Probe 7 configuration	nu = Not used	EPt = Evaporator temperature
G12	Defrost probe selection	nu = Not used	EPt = Evaporator temperature
G23	Defrost interval mode	nu = Not used	In = By time (G18)
S05	Relay output 2	nu = Not used	dEF = Defrost
G18	Interval between defrost cycles	4 min	Adjust to application requirements
G19	Maximum duration of defrost	20 min	Adjust to application requirements
G21	Defrost termination temperature	10	Adjust to application requirements
G26	Drip time	1 min	Adjust to application requirements

Defrost with Real Time Clock System restart is required!			
Parameter	**Parameter description**	**Factory setting**	**Required setting**
A19	Probe 7 configuration	nu = Not used	EPt = Evaporator temperature
G12	Defrost probe selection	nu = Not used	EPt = Evaporator temperature
G23	Defrost interval mode	nu = Not used	rtC = Real time clock
S05	Relay output 2	nu = Not used	dEF = Defrost
G18	Interval between defrost cycles	4 min	Adjust to application requirements
G19	Maximum duration of defrost	20 min	Adjust to application requirements
G21	Defrost termination temperature	10 °C	Adjust to application requirements
G26	Drip time	1 min	Adjust to application requirements
G28-41	See Technical Information TI_Unit_ZX_A2L_01 "Copeland ZX*Y outdoor refrigeration units for A1 & A2L Applications – XCM25D Controller parameter list"	-	Adjust to application requirements

Defrost with evaporator fan System restart is required!			
Parameter	**Parameter description**	**Factory setting**	**Required setting**
A19	Probe 7 configuration	nu = Not used	EPt = Evaporator temperature
G12	Defrost probe selection	nu = Not used	EPt = Evaporator temperature
G23	Defrost interval mode	nu = Not used	In = By time (G18)
G42	Fans operating mode	Cn	Oy
S05	Relay output 2	nu = Not used	EPF = Evaporator fan
G18	Interval between defrost cycles	4 min	Adjust to application requirements
G19	Maximum duration of defrost	20 min	Adjust to application requirements
G21	Defrost termination temperature	10 °C	Adjust to application requirements
G26	Drip time	1 min	Adjust to application requirements
G55	Fan delay after defrost	1 min	Adjust to application requirements

Unit On/Off System restart is required!			
Parameter	**Parameter description**	**Factory setting**	**Required setting**
R07	Digital input 3 configuration	nu = Not used	OnF = On/Off
R08	Digital input 3 polarity	CL = Closed	Adjust to application requirements

Evaporator fan System restart is required!			
Parameter	**Parameter description**	**Factory setting**	**Required setting**
G42	Fans operating mode	cn	cn = Switch on and off with the compressor, stop during defrost On = Always on, stop during defrost cy = Switch on and off with the compressor, run during defrost Oy = Always on, run during defrost
S05	Relay output 2	nu = Not used	EpF = Evaporator fan
G45	Fan on time	1 min	Adjust to application requirements
G46	Fan off time	1 min	Adjust to application requirements
G55	Fan delay after defrost	1 min	Adjust to application requirements

System EXV System restart is required!			
Parameter	**Parameter description**	**Factory setting**	**Required setting**
A19	Probe 7 configuration	nu = Not used	SLt = Suction line temp
L02	Set of superheating	5	7
S11	EXV configuration	uIn or LIn	SHt = System superheat

Door switch System restart is required!			
Parameter	**Parameter description**	**Factory setting**	**Required setting**
G08	Compressor and fan status with open door	Fn	nO = Normal operation Fn = Stop fan cP = Compressor off Fc = Compressor and fans off
R07	Digital input 3 configuration	nu = Not used	dOr = Door
G53	Maximum time with open door before alarm goes off	3 min	Adjust to application requirements
R08	Digital input 3 polarity	CL = Closed	Adjust to application requirements

Table 39: Additional features for customization

Appendix 8: Temperature / resistance curve for B7 Sensor (customer option)

R25 = 10 kΩ B25/85 = 3435 K

Temp. (°C)	Resistance (kΩ)	Temp. (°C)	Resistance (kΩ)	Temp. (°C)	Resistance (kΩ)	Temp. (°C)	Resistance (kΩ)	Temp. (°C)	Resistance (kΩ)	Temp. (°C)	Resistance (kΩ)
-50	329.2	-21	71.07	8	19.48	37	6.468	66	2.512	95	1.108
-49	310.7	-20	67.74	9	18.70	38	6.246	67	2.437	96	1.080
-48	293.3	-19	64.54	10	17.96	39	6.033	68	2.365	97	1.052
-47	277.0	-18	61.52	11	17.24	40	5.829	69	2.296	98	1.025
-46	261.3	-17	58.65	12	16.55	41	5.630	70	2.229	99	0.999
-45	247.5	-16	55.95	13	15.90	42	5.439	71	2.163	100	0.974
-44	234.1	-15	53.39	14	15.28	43	5.256	72	2.101	101	0.949
-43	221.6	-14	50.95	15	14.68	44	5.080	73	2.040	102	0.925
-42	209.8	-13	48.66	16	14.12	45	4.912	74	1.981	103	0.902
-41	198.7	-12	46.48	17	13.57	46	7.749	75	1.924	104	0.879
-40	188.4	-11	44.44	18	13.06	47	4.594	76	1.870	105	0.858
-39	178.3	-10	42.45	19	12.56	48	4.444	77	1.817	106	0.836
-38	168.9	-9	40.56	20	12.09	49	4.300	78	1.766	107	0.816
-37	160.1	-8	38.76	21	11.63	50	4.161	79	1.716	108	0.796
-36	151.8	-7	37.05	22	11.20	51	4.026	80	1.669	109	0.777
-35	144.0	-6	35.43	23	10.78	52	3.897	81	1.622	110	0.758
-34	136.6	-5	33.89	24	10.38	53	3.772	82	1.577	111	0.740
-33	129.7	-4	32.43	25	10.00	54	3.652	83	1.534	112	0.722
-32	123.2	-3	31.04	26	9.632	55	3.537	84	1.492	113	0.705
-31	117.1	-2	29.72	27	9.281	56	3.426	85	1.451	114	0.688
-30	111.3	-1	28.47	28	8.944	57	3.319	86	1.412	115	0.672
-29	105.7	0	27.28	29	8.622	58	3.216	87	1.374	116	0.656
-28	100.4	1	26.13	30	8.313	59	3.116	88	1.337	117	0.641
-27	95.47	2	25.03	31	8.015	60	3.021	89	1.301	118	0.626
-26	90.80	3	23.99	32	7.725	61	2.928	90	1.266	119	0.611
-25	86.39	4	22.99	33	7.455	62	2.838	91	1.233	120	0.597
-24	82.22	5	22.05	34	7.192	63	2.752	92	1.200		
-23	78.29	6	21.15	35	6.941	64	2.669	93	1.169		
-22	74.58	7	20.30	36	6.699	65	2.589	94	1.138		

Table 40: B7 AI7 optional sensor >> Temperature / resistance curve

Appendix 9: List of tables and figures

Tables

Table 1: ZX*Y refrigeration units technical data 4
Table 2: ZX*Y refrigeration units features 5
Table 3: Qualified refrigerants and oils 7
Table 4: PED category based on refrigerant used 7
Table 5: BOM variations 8
Table 6: Sensors & transmitters on P&I diagrams for ZXMY units 8
Table 7: Sensors & transmitters on P&I diagrams for ZXDY units 9
Table 8: Sensors & transmitters on P&I diagrams for ZXLY*E units 10
Table 9: Sensors & transmitters on P&I diagrams for ZXLY*IE units 11
Table 10: Compressor models cross reference 12
Table 11: Condenser fans technical data 12
Table 12: Pre-arranged additional connections 15
Table 13: Digital output specifications 16
Table 14: External room thermostat – Parameters 16
Table 15: External temperature sensor – Parameters 17
Table 16: Discharge pressure limitations 17
Table 17: Defrost parameters 19
Table 18: LED functions description 20
Table 19: Display visualisation 20
Table 20: Single commands 21
Table 21: Double commands 21
Table 22: Programming level 1 parameters 22
Table 23: Fast access menu 23
Table 24: Parameters in programming level Pr1 24
Table 25: Minimum cut-out value for pumpdown 26
Table 26: Pumpdown 1 26
Table 27: Pumpdown 2 26
Table 28: Internal pumpdown with temperature sensor 27
Table 29: How to check the alarm list 29
Table 30: Weights 31
Table 31: Piping connection sizes 32
Table 32: Maximum distances between 2 clamp supports 32
Table 33: Unit maximum rated currents for cable selection 36
Table 34: Main fuse settings 39
Table 35: PRV minimum requirements 39
Table 36: Overview of the ZX*Y unit components 53
Table 37: Parameters level 1 57
Table 38: Alarm code overview 61
Table 39: Additional features for customization 65
Table 40: B7 AI7 optional sensor >> Temperature / resistance curve 66

Figures

Figure 1: Dimensions of models ZXMY-020E to ZXMY-040E, ZXDY-030E, ZXLY-020E to ZXLY-040E and ZXLY-050IE (single-fan units) 5
Figure 2: Dimensions of models ZXMY-050E to ZXMY-075E, ZXDY-040E to ZXDY-075E, ZXLY-060IE & ZXLY-075IE (dual-fan units) 6
Figure 3: Nomenclature ZX*Y units 6
Figure 4: P&I diagram for ZXMY units 8
Figure 5: P&I diagram for ZXDY units 9
Figure 6: P&I diagram for ZXLY*E units 10
Figure 7: P&I diagram for ZXLY*IE units 11
Figure 8: ZX*Y unit housing 12
Figure 9: XCM25D Electronic controller 13
Figure 10: XCM25D controller functionality overview 14
Figure 11: Modbus port and termination jumpers 14
Figure 12: Pre-arranged additional connections 16
Figure 13: External temperature sensor – Functionality 17
Figure 14: Local display 20
Figure 15: Remote display front panel mounting 21
Figure 16: VNR connection for the remote display 21
Figure 17: Digital operation 25
Figure 18: Pumpdown functionality with temperature sensor 27
Figure 19: Copeland Controls Hot Key 28
Figure 20: Location of hot key plug connection 28
Figure 21: Maximum stacking loads for transport and storage 31
Figure 22: Brazing – Sectional view 33
Figure 23: Suction tube brazing areas 34
Figure 24: Ground connection on top cover, right cover and divider 35
Figure 25: Ground connection on right cover and baseplate 35
Figure 26: Ground connection on fan bracket and baseplate 35
Figure 27: Ground connection on door and ground connection on condenser 35
Figure 28: Ground connection in electrical cabinet 36
Figure 29: Circuit breaker with overcurrent protection 38
Figure 30: Top cover of ZX*Y refrigeration units 39
Figure 31: Access to PRV port 40
Figure 32: PRV port without plug 40
Figure 33: Example of pressure relief valve and discharge pipe configuration 40
Figure 34: Fixing dimensions and distances – Single-fan units 41
Figure 35: Fixing dimensions and distances – Dual-fan units 42
Figure 36: Service valves for refrigerant charging 44
Figure 37: Tube connecting areas 48
Figure 38 Figure 39 Figure 40 Figure 41 49
Figure 42: Visual inspection of the rubber gasket 50
Figure 43: Wiring diagram – ZXMY & ZXLY*E units 54

Figure 44: Wiring diagram – ZXLY*IE units 55
Figure 45: Wiring diagram – ZXDY units 56

DISCLAIMER: The Copeland logo is a trademark and service mark of Copeland LP or one of its affiliates. Copeland Europe GmbH shall not be liable for errors in the stated capacities, dimensions, etc., as well as typographic errors. Products, specifications, assumptions, designs and technical data contained in this document are subject to modification by us without prior notice. Illustrations are not binding. ©2026 Copeland LP. All rights reserved.

BENELUX
Josephinastraat 19
NL-6462 EL Kerkrade
Tel: +31 45 535 06 73
benelux.sales@copeland.com

GERMANY, AUSTRIA & SWITZERLAND
Pascalstr. 65
DE-52076 Aachen
Tel: +49 2408 929 10
cde.sales@copeland.com

FRANCE, GREECE & MAGHREB
8, Allée du Moulin Berger
FR-69134 Ecully Cédex,
Technoparc - CS 90220
Tel: +33 4 78 66 85 70
Fax: +33 4 78 66 85 71
mediterranean.sales@copeland.com

ITALY
Via Ramazzotti, 26
IT-21047 Saronno (VA)
Tel: + 39 02 9713 8060
italy.sales@copeland.com

SPAIN & PORTUGAL
C/ Pujades, 51-55 Box 53
ES-08005 Barcelona
Tel: +34 93 609 97 41
iberica.sales@copeland.com

CZECH REPUBLIC
Hajkova 22
CZ - 133 00 Prague
Tel: +420 733 161 651
Fax: +420 271 035 655
Pavel.Sudek@copeland.com

ROMANIA & BULGARIA
Str. Alexandru Vaida Voevod Nr. 53B, Et. 5
400436, Cluj-Napoca, Romania
Tel: +40 364 821 680
ro-bg.sales@copeland.com

UK & IRELAND
Tel: +44 1189 83 80 00
Fax: +44 1189 83 80 01
uk.sales@copeland.com

SWEDEN, DENMARK, NORWAY & FINLAND
Pascalstr. 65
DE-52076 Aachen
Tel: +49 2408 929 10
nordic.sales@copeland.com

EASTERN EUROPE & TURKEY
Pascalstr. 65
DE-52076 Aachen
Tel: +49 2408 929 10
easterneurope.sales@copeland.com

POLAND
ul. Konstruktorska 13
PL-02673 Warsaw
Tel: +48 22 458 92 05
Fax: +48 22 458 92 55
poland.sales@copeland.com

BALKAN
Selska cesta 93
HR-10 000 Zagreb
Tel: +385 1 560 38 75
Fax: +385 1 560 38 79
balkan.sales@copeland.com

MIDDLE EAST & AFRICA
PO Box 26382
Jebel Ali Free Zone - South, Dubai - UAE
Tel: +971 4 811 81 00
Fax: +971 4 886 54 65
mea.sales@copeland.com

ASIA PACIFIC
Suite 2503-8, 25/F., Exchange Tower
33 Wang Chiu Road, Kowloon Bay
Kowloon , Hong Kong
Tel: +852 2866 3108
Fax: +852 2520 6227

For more details, see copeland.com/en-gb

Copeland Europe GmbH
Pascalstrasse 65 - 52076 Aachen, Germany
Tel. +49 (0) 2408 929 0 - Fax: +49 (0) 2408 929 570 – Internet: copeland.com/en-gb

The Copeland logo is a trademark and service mark of Copeland LP or one of its affiliates. Copeland Europe GmbH shall not be liable for errors in the stated capacities, dimensions, etc., as well as typographic errors. Products, specifications, assumptions, designs and technical data contained in this document are subject to modification by us without prior notice. Illustrations are not binding. ©2026 Copeland LP. All rights reserved.

COPELAND