Single
Packs

Single Pack NLV12.6CN 100-240V 50/60Hz PM

Single pack code number: **195B4576**

Position	Title	Code	Amount
1	Compressor NLV12.6CN	105H6365	1
2	Cover	103N2008	1
3	Bolt joint for one compressor | M6 | ø16mm	118-1917	1

Secop GmbH • Lise-Meitner-Straße 29 • 24941 Flensburg, Germany • Tel: +49 461 4941 0 • **www.secop.com**

Secop accepts no responsibility for possible errors in catalogs, brochures, and other printed material. Secop reserves the right to alter its products without notice. This also applies to products already on order provided that such alterations can be made without subsequential changes being necessary to specifications already agreed. All trademarks in this material are the property of the respective companies. Secop and the Secop logotype are trademarks of Secop GmbH. All rights reserved.

Model
NLV12.6CN

Sales code:
105H6365

Compressor Data

Refrigerant(s)	**R290**
Refr. charge - tech. limit	**300g / 10.58oz**
Weight	**10.80 kg / 23.81lbs**
Displacement	**12.55 cm3 / 0.77cu.in**
Compressors on pallet	**80**



General – Configurations With NLV12.6CN and Controller

–	**Conf. 1**	**Conf. 2**	**Conf. 3**	**Conf. 4**
Sales code single pack:	105N4910	105N4960	105N4962	105N4866
Power supply (nominal)	220-240 V,50/60 Hz	100-240 V,50/60 Hz	100-240 V,50/60 Hz	100-240 V,50/60 Hz
Number of phases	1~AC	1~AC	1~AC	1~AC
Approvals	VDE, CCC	VDE, UL, CCC, CB	VDE, UL, CCC, CB	CCC, VDE, UL, CB
Starting torque	HST	HST	HST	HST
Refrigerant	R290	R290	R290	R290
Application	L+MBP	L+MBP	L+MBP	L+MBP
Hot gas defrost	OK	OK	OK	OK
Long interval pull down	OK	OK	OK	OK
Protection	Mechanic	Mechanic	Mechanic	Mechanic

Application Notes

- Provision for PE Grounding is located at the PE Stamp on the compressor

Model
NLV12.6CN

Sales code:
105H6365

Compressor Design

Oil type	**POE**	Motor protection	**internal**
Oil viscosity	**32cSt**	Max. winding temp.	**125 °C**
Oil quantity	**300 / 10.14fl.oz**	Max. discharge temp.	**130°C / 266°F**
Free gas volume comp.	**2,360 cm3 / 79.80fl.oz**		

Compressor Dimensions

Housing

A Height	**203mm / 7.99in**
B Height	**197mm / 7.76in**
C Length shell	**205mm / 8.07in**
D Length w. cover	**252mm / 9.92in**
E Width	**166mm / 6.54in**

Find 3D Model here

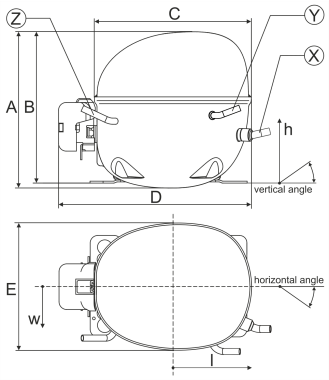

Connectors	Suction X	Discharge Y	Process Z
Diameter [mm]	øi 8.11–8.29 / 0.32–0.33in	øi 6.11–6.29 / 0.24–0.25in	øi 6.11–6.29 / 0.24–0.25in
Material	CU	CU	CU
Horizontal angle ±2°	0°	0°	0°
Vertical angle ±2°	15°	21°	155°
Position l/h/w [mm]	132/68.5/56.7 / 5.20/2.70/2.23in	94/101.7/81 / 3.70/4.00/3.19in	-109.3/94.3/72 / -4.30/3.71/2.83in
Straight tube l. [mm]	12 / 0.47in	12 / 0.47in	12 / 0.47in

Mounting Accessories

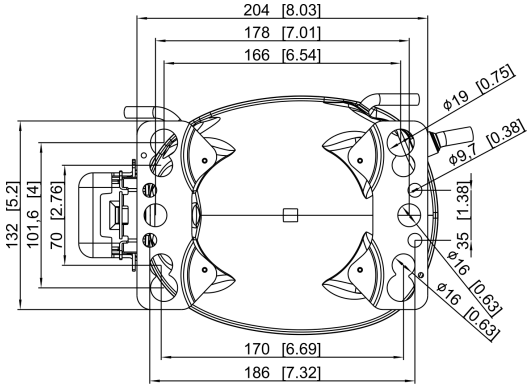

Dimensions in mm [in]

Bolt joint

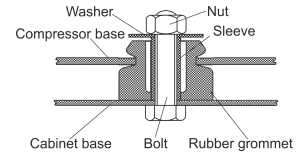

Snap-on

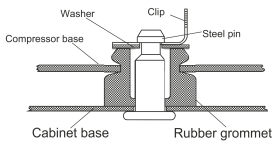

	one comp.	multi pack
Bolt joint | M6 | ø16mm	118-1917	118-1918
Bolt joint | ø1/4" | ø16mm	118-1946	–
Bolt joint | ø1/4" | ø19mm	118-1949	–
Snap-on | ø7,3 | ø16mm	118-1947	118-1919

Model
NLV12.6CN System Design

Sales code:
105H6365

System Design

Operation Pressure Range R290

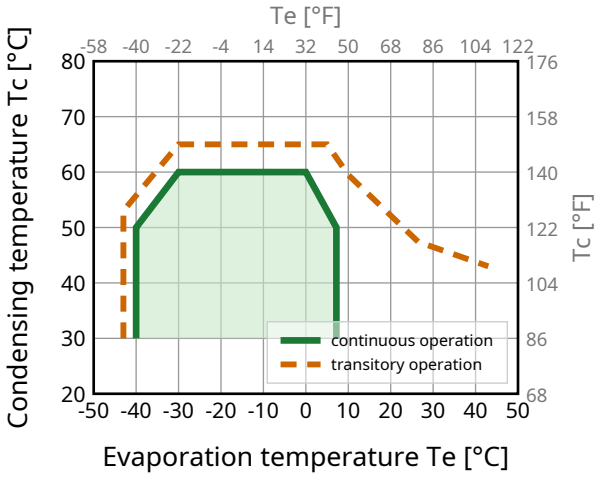

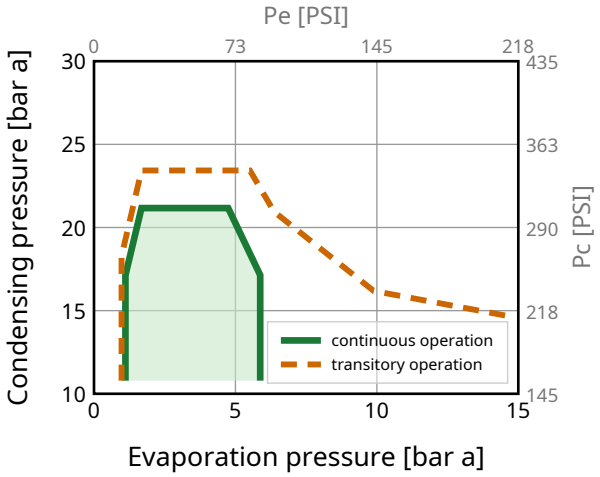

System Cooling

Compressor and Controller Cooling: fan 3m/s

Ensure proper airflow of 3 m/s at both compressor and electronic units.

The airflow for the electronics must be directed to the heat sink.

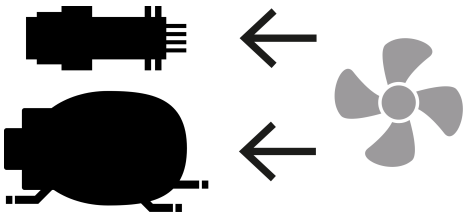

Accessories (Compressor + Controller)

103N2008	plastic cover	1 pcs

Operation Limits

Suctiongas temperature < +20 °C (contininous operation)

Model

NLV12.6CN Controller Overview

Sales code:

105H6365

Controller Overview

–	**Conf. 1**	**Conf. 2**	**Conf. 3**	**Conf. 4**
Sales code single pack:	105N4910	105N4960	105N4962	105N4866
Sales code industry pack:	105N4911 (8)	105N4961 (8)	105N4963 (8)	105N4867 (8)
Voltage nom.:	220-240 V,50/60 Hz	100-240 V,50/60 Hz	100-240 V,50/60 Hz	100-240 V,50/60 Hz
Voltage range	180-270 V	90-150/180-270 V	90-150/180-270 V	90-150/180-270 V
Max output power	1000 W	1000 W	1000 W	1000 W
Compressor speed range:	2000-4500 rpm	2000-4500 rpm	2000-4500 rpm	2000-4500 rpm
Cable length:	680 mm	680 mm	915 mm	680 mm
Protection class:	IP54	IP54	IP54	IP43
LRA (Locked Rotor Amperage):	1,2 A	1,2 A	1,2 A	1,2 A
AEO and Defrost pin	Yes	Yes	Yes	–
Frequency input	Yes	Yes	Yes	–
Modbus input	SWI	SWI	SWI	RS485
Controller Wiring	» Controller Wiring	» Controller Wiring	» Controller Wiring	» Controller Wiring

Controller Dimensions

Conf. 1, 2, 3

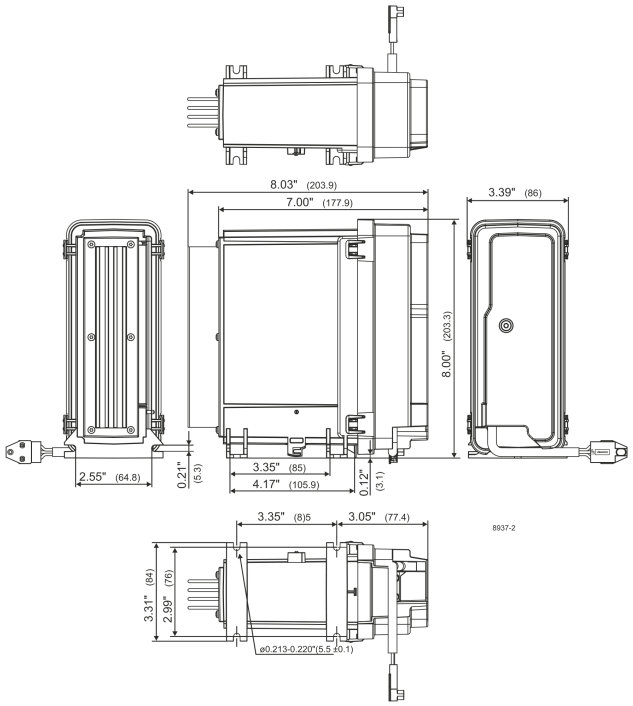

Conf. 4

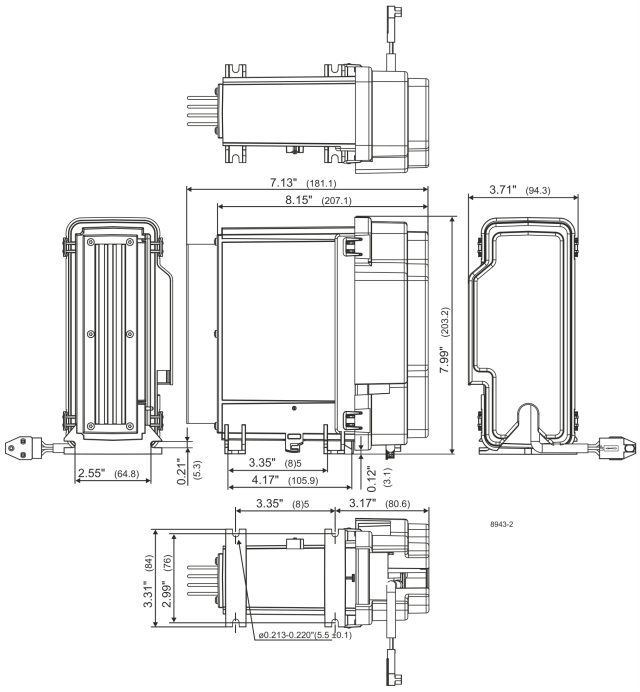

Operating Instructions

For proper installation and operation of variable-speed compressors and controllers, please refer to the Operating Instructions. The document covers electrical installation, speed control, and technical data for the controller.

» Download Operating Instructions

Model
NLV12.6CN

Sales code:
105H6365

Standard Conditions — 2000 rpm

R290, 220 V/50 Hz, fan 3m/s

pe	pc	RGT	Tliq	Cooling capacity			COP	EER	P	I	ṁ	
[°C] [°F]	[°C] [°F]	[°C] [°F]	[°C] [°F]	[W]	[Btu/h]	[kcal/h]	[W/W]	[Btu/Wh]	[W]	[A]	[kg/h]	
-23.3 -10	54.4 129.9	32.2 90	32.2 90	**432**	1474	371	**1.75**	5.95	248	1.35	4.39	**ASHRAE LBP**
-25 -13	55 131	32 89.6	55 131	**322**	1098	277	**1.36**	4.63	237	1.29	4.04	**CECOMAF LBP**
-35 -31	40 104	20 68	40 104	**245**	835	211	**1.44**	4.93	170	0.92	2.81	**EN12900 LBP**
-6.7 20	54.4 129.9	35 95	46.1 115	**769**	2623	661	**2.19**	7.47	351	1.91	8.80	**ASHRAE MBP**
-10 14	55 131	32 89.6	55 131	**610**	2082	525	**1.84**	6.26	332	1.80	7.76	**CECOMAF MBP**
-10 14	45 113	20 68	45 113	**688**	2346	591	**2.25**	7.69	305	1.66	8.46	**EN12900 MBP**

Performance Tables — 2000 rpm

R290, 220 V/50 Hz, fan 3m/s

pc= 45/113 | RGT= 32/89.6 | Tliq= 45/113 | °C/°F

pe		Cooling capacity			COP	EER	P	I	ṁ
[°C]	[°F]	[W]	[Btu/h]	[kcal/h]	[W/W]	[Btu/Wh]	[W]	[A]	[kg/h]
-40	-40	**177**	605	152	**1.20**	4.08	148	0.79	1.99
-30	-22	**301**	1026	259	**1.51**	5.14	200	1.08	3.40
-20	-4	**476**	1623	409	**1.88**	6.42	253	1.38	5.41
-10	14	**715**	2440	615	**2.34**	7.99	305	1.66	8.21
0	32	**1030**	3515	886	**2.91**	9.94	354	1.92	11.98
7.2	45	**1311**	4473	1128	**3.41**	11.63	385	2.09	15.42

pc= 55/131 | RGT= 32/89.6 | Tliq= 55/131 | °C/°F

-40	-40	**143**	489	123	**0.96**	3.29	148	0.80	1.78
-30	-22	**252**	861	217	**1.22**	4.17	207	1.12	3.15
-20	-4	**404**	1378	347	**1.50**	5.12	269	1.46	5.08
-10	14	**610**	2082	525	**1.84**	6.26	332	1.80	7.76
0	32	**883**	3013	759	**2.24**	7.65	394	2.14	11.39
7.2	45	**1128**	3848	970	**2.59**	8.85	435	2.36	14.73

Model
NLV12.6CN

Sales code:
105H6365

Standard Conditions — 4500 rpm

R290, 220 V/50 Hz, fan 3m/s

pe	pc	RGT	Tliq	Cooling capacity			COP	EER	P	I	ṁ	
[°C] [°F]	[°C] [°F]	[°C] [°F]	[°C] [°F]	[W]	[Btu/h]	[kcal/h]	[W/W]	[Btu/Wh]	[W]	[A]	[kg/h]	
-23.3 -10	54.4 129.9	32.2 90	32.2 90	**954**	3254	820	**1.78**	6.09	534	2.90	9.69	**ASHRAE LBP**
-25 -13	55 131	32 89.6	55 131	**711**	2427	612	**1.39**	4.73	514	2.79	8.92	**CECOMAF LBP**
-35 -31	40 104	20 68	40 104	**544**	1855	468	**1.51**	5.16	360	1.96	6.24	**EN12900 LBP**
-6.7 20	54.4 129.9	35 95	46.1 115	**1678**	5724	1443	**2.19**	7.46	767	4.17	19.21	**ASHRAE MBP**
-10 14	55 131	32 89.6	55 131	**1336**	4558	1149	**1.84**	6.30	724	3.94	16.99	**CECOMAF MBP**
-10 14	45 113	20 68	45 113	**1504**	5131	1293	**2.30**	7.84	654	3.56	18.51	**EN12900 MBP**

Performance Tables — 4500 rpm

R290, 220 V/50 Hz, fan 3m/s

pc= 45/113 | RGT= 32/89.6 | Tliq= 45/113 | °C/°F

pe		Cooling capacity			COP	EER	P	I	ṁ
[°C]	[°F]	[W]	[Btu/h]	[kcal/h]	[W/W]	[Btu/Wh]	[W]	[A]	[kg/h]
-40	-40	**396**	1353	341	**1.25**	4.25	318	1.73	4.46
-30	-22	**666**	2273	573	**1.58**	5.39	421	2.29	7.53
-20	-4	**1048**	3577	902	**1.95**	6.66	537	2.92	11.93
-10	14	**1564**	5335	1345	**2.39**	8.15	654	3.56	17.95
0	32	**2232**	7615	1919	**2.92**	9.98	763	4.15	25.95
7.2	45	**2819**	9618	2424	**3.40**	11.59	830	4.51	33.16

pc= 55/131 | RGT= 32/89.6 | Tliq= 55/131 | °C/°F

-40	-40	**315**	1076	271	**0.94**	3.19	337	1.83	3.92
-30	-22	**557**	1902	479	**1.24**	4.23	449	2.44	6.96
-20	-4	**891**	3039	766	**1.53**	5.22	582	3.16	11.21
-10	14	**1336**	4558	1149	**1.84**	6.30	724	3.94	16.99
0	32	**1913**	6527	1645	**2.21**	7.53	866	4.71	24.67
7.2	45	**2422**	8262	2082	**2.52**	8.58	962	5.23	31.63

Model
NLV12.6CN

Sales code:
105H6365

Optimal Performance

R290, 220 V/50 Hz, fan 3m/s
Shows the speed (RPM) that achieves the highest COP at each standard condition.

pe	pc	RGT	Tliq	Cooling capacity			COP	EER	P	RPM	
[°C] [°F]	[°C] [°F]	[°C] [°F]	[°C] [°F]	[W]	[Btu/h]	[kcal/h]	[W/W]	[Btu/Wh]	[W]	[rpm]	
-23.3 -10	54.4 129.9	32.2 90	32.2 90	**657**	2240	565	**1.83**	6.24	359	**3000**	**ASHRAE LBP**
-25 -13	55 131	32 89.6	55 131	**492**	1678	423	**1.43**	4.88	344	**3000**	**CECOMAF LBP**
-35 -31	40 104	20 68	40 104	**301**	1028	259	**1.53**	5.22	197	**2500**	**EN12900 LBP**
-6.7 20	54.4 129.9	35 95	46.1 115	**1150**	3923	989	**2.28**	7.77	505	**3000**	**ASHRAE MBP**
-10 14	55 131	32 89.6	55 131	**914**	3119	786	**1.91**	6.52	478	**3000**	**CECOMAF MBP**
-10 14	45 113	20 68	45 113	**1003**	3423	863	**2.31**	7.88	434	**3000**	**EN12900 MBP**

Cooling Capacity vs. COP

R290, 220 V/50 Hz, fan 3m/s

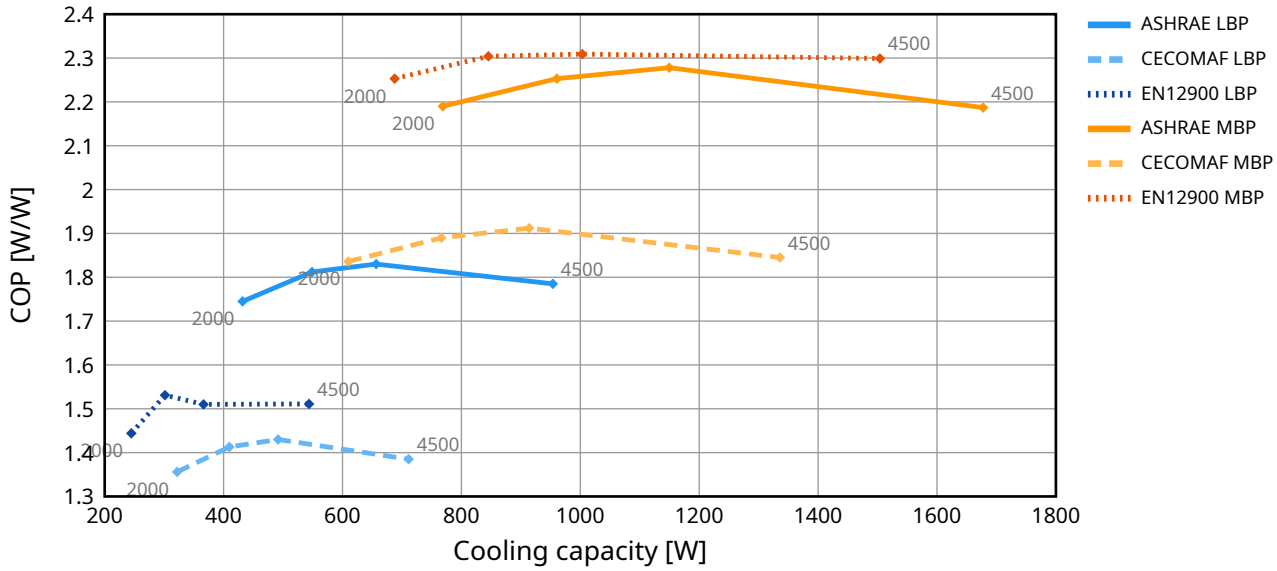

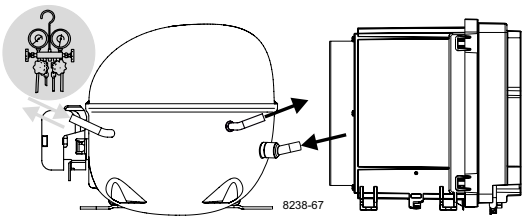

Instructions

NLV/MN-UV Compressors
100-240 V, 50/60 Hz
105N4960/105N4964
Controllers

SECOP

Keep electrical equipment clear from oil, chemicals, and water



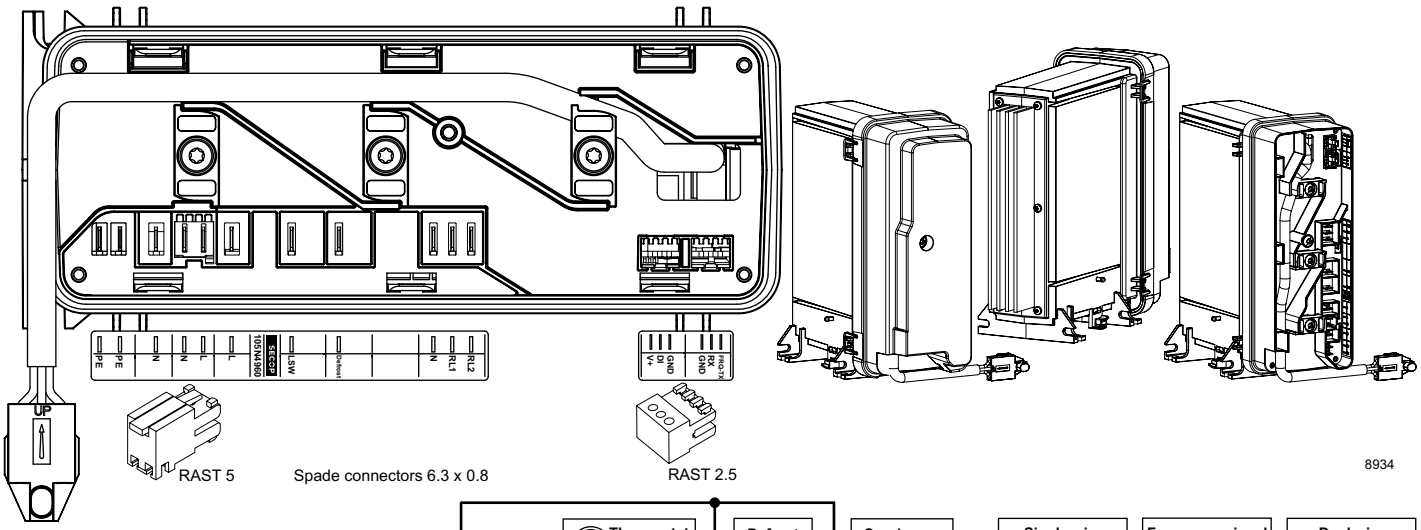

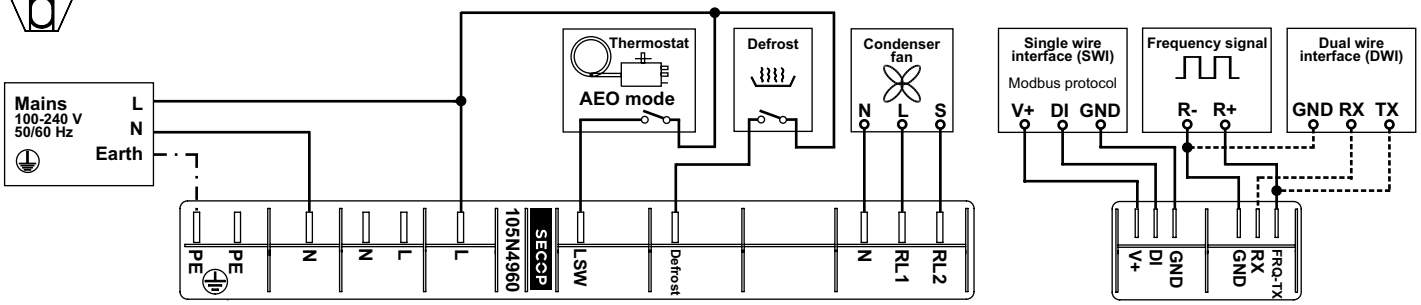

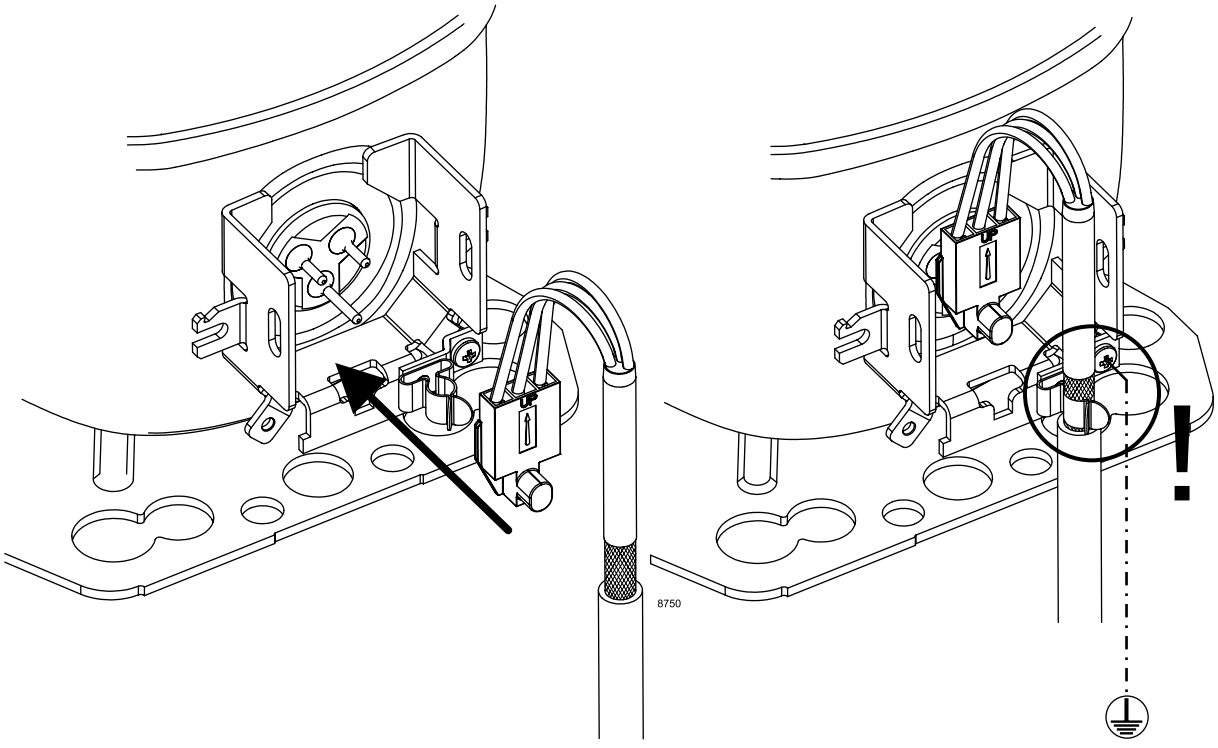

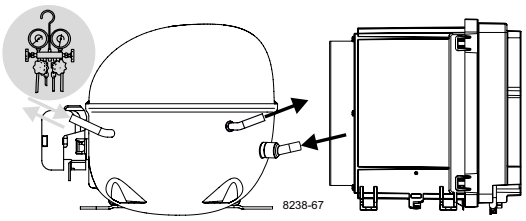

Instructions

NLV/MN-UV Compressors
100-240 V, 50/60 Hz
105N4960/105N4964
Controllers

SECOP

Keep electrical equipment clear from oil, chemicals, and water



Service/Repair – R170, R290, R1270

(applies to all flammable refrigerants)



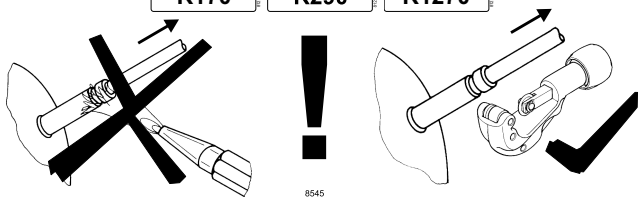

Brazing on Suction Connectors (Direct Intake)

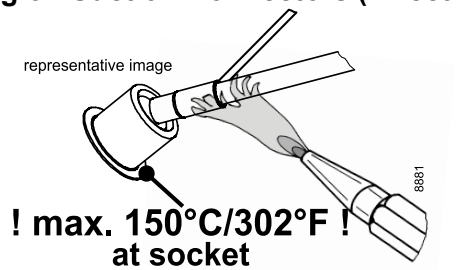

! max. 150°C/302°F ! at socket

brazing solder: phosphor (LP7) or silver

Refer to Product Bulletin: **Brazing on Suction Connectors (Compressors with Direct Suction Intake)**

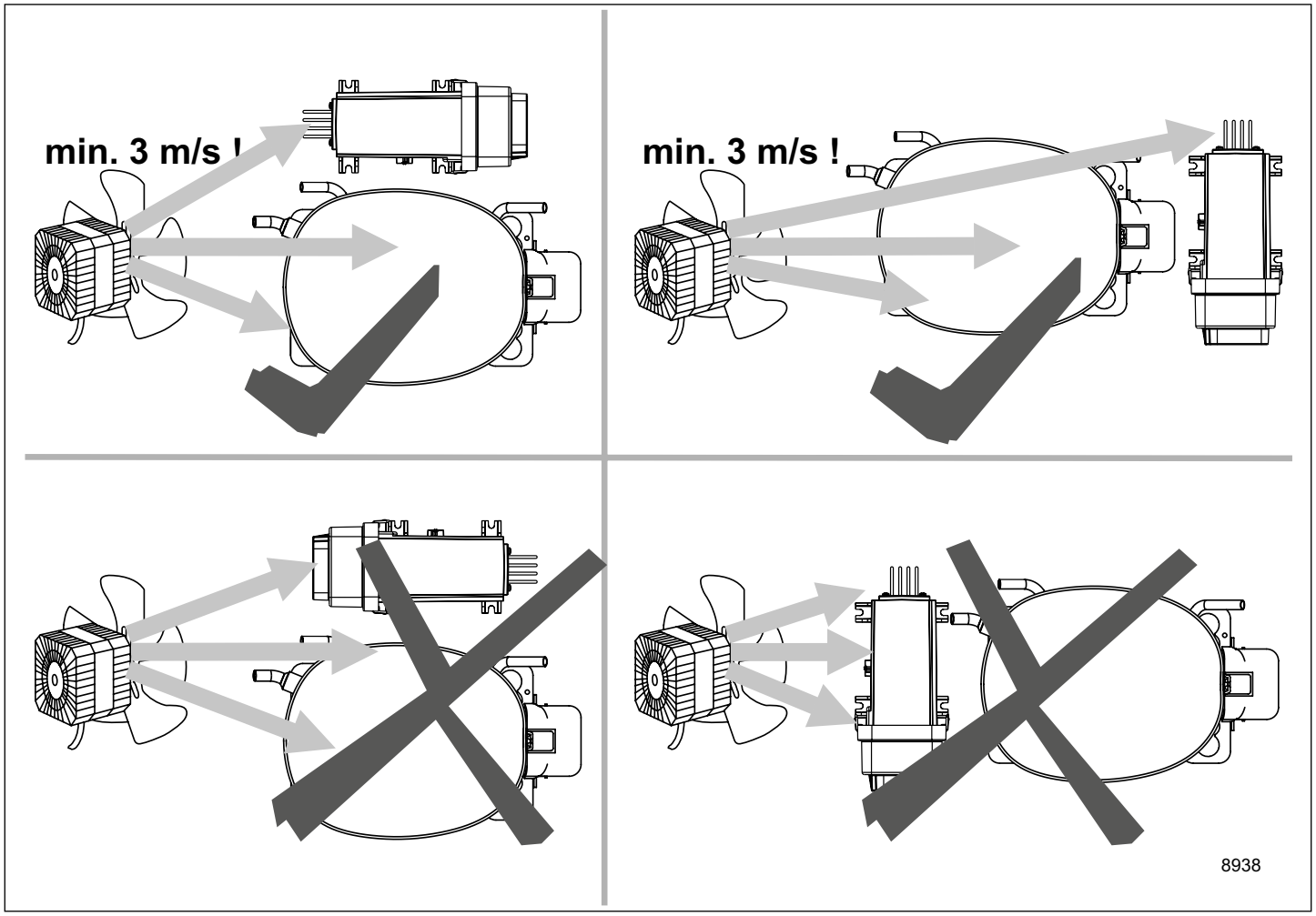

Airflow	3 m/s
Operating conditions	+ 5 °C to 43 °C - humidity < 90 % rH non condensing
Storage conditions	-25 °C to 70 °C - humidity < 90 % rH non condensing
Supply voltage	100-240 V (± 10 %)
Frequency	50/60 Hz
Input power, max.	1000 W

Dismantling, recycling, disposal: At the end of a compressor's lifecycle, proceed by separating and storing components according to their environmental impact. Parts that may cause pollution must be clearly identified and handled separately, ensuring appropriate disposal. Refrigerant gas must not be released into the environment and should be recovered by qualified operators. Compressor oil must also be collected separately. The compressor should be disposed of at specialized disposal centers in accordance with the applicable regulations. **Subject to modifications/alterations. www.secop.com**

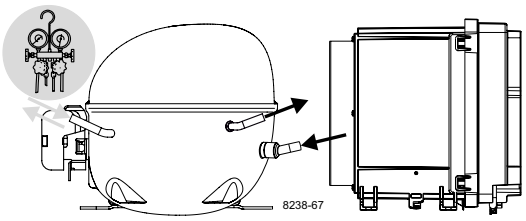

Instructions

NLV/MN-UV Compressors
100-240 V, 50/60 Hz
105N4962/105N4966/
105N4972 Controllers

SECOP

Keep electrical equipment clear from oil, chemicals, and water



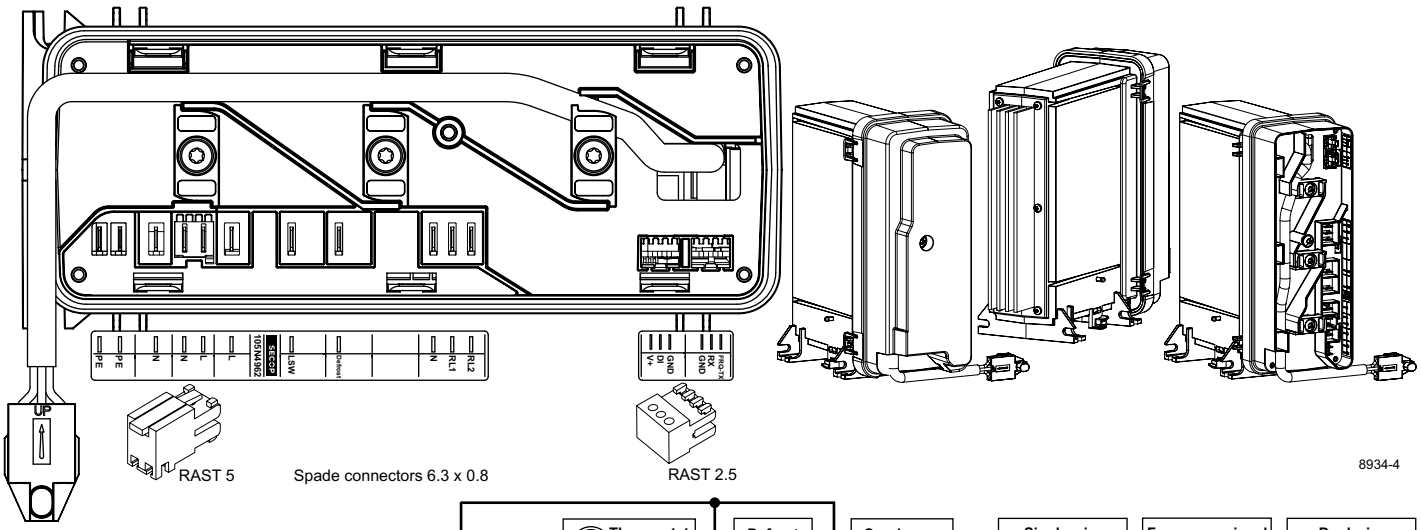

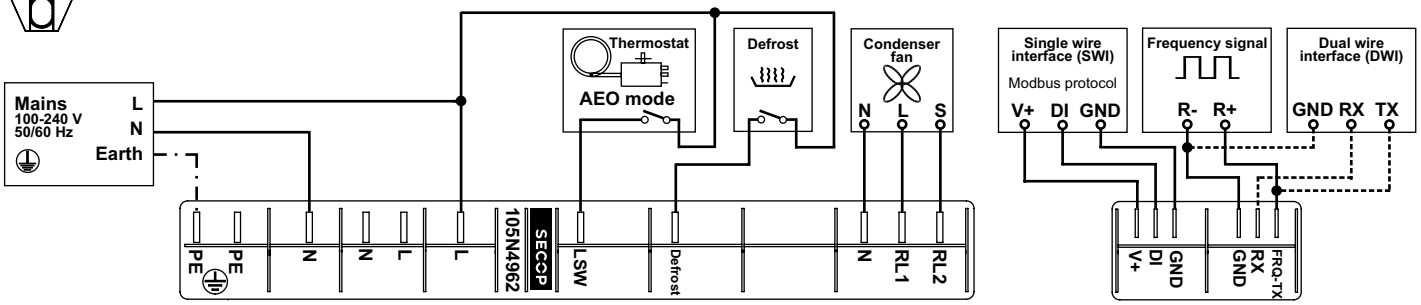

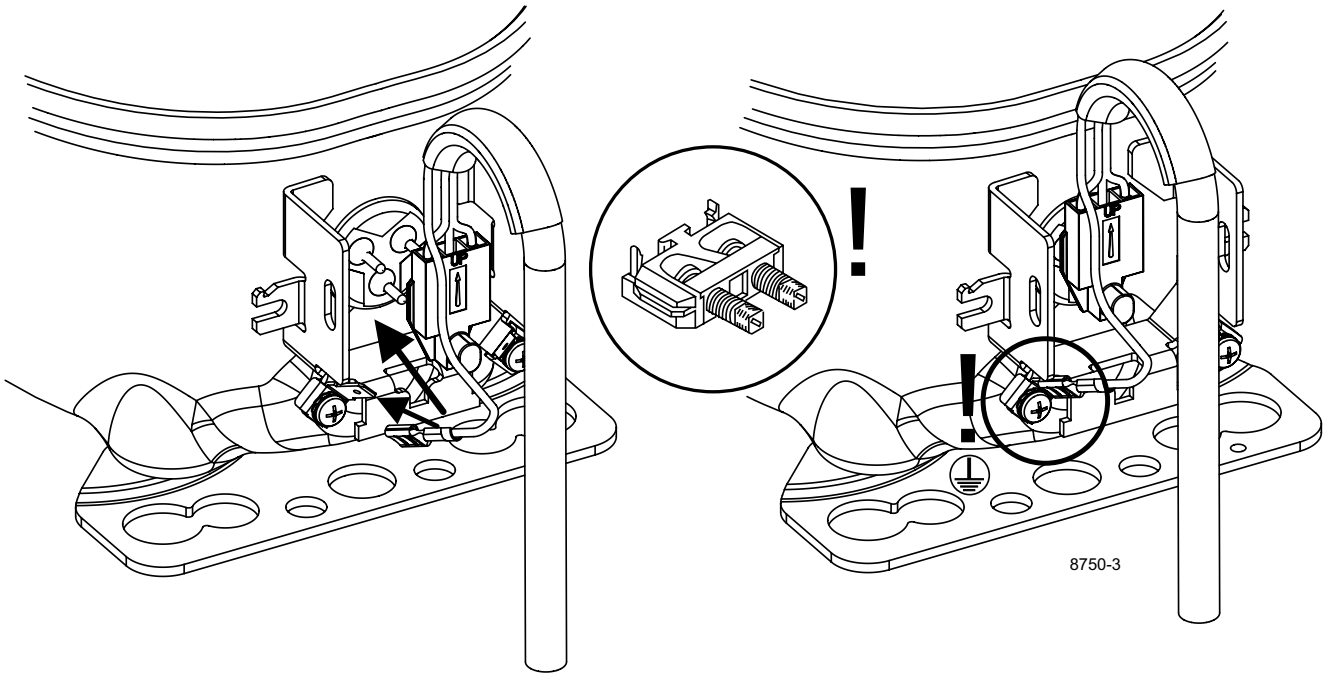

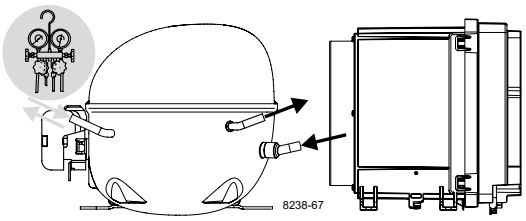

Instructions

NLV/MN-UV Compressors
100-240 V, 50/60 Hz
105N4962/105N4966/
105N4972 Controllers

SECOP

Keep electrical equipment clear from oil, chemicals, and water



Service/Repair – R170, R290, R1270

(applies to all flammable refrigerants)



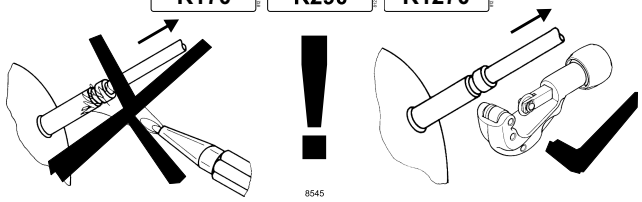

Brazing on Suction Connectors (Direct Intake)

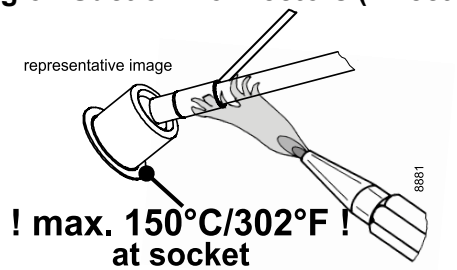

! max. 150°C/302°F ! at socket

brazing solder: phosphor (LP7) or silver

Refer to Product Bulletin: **Brazing on Suction Connectors (Compressors with Direct Suction Intake)**

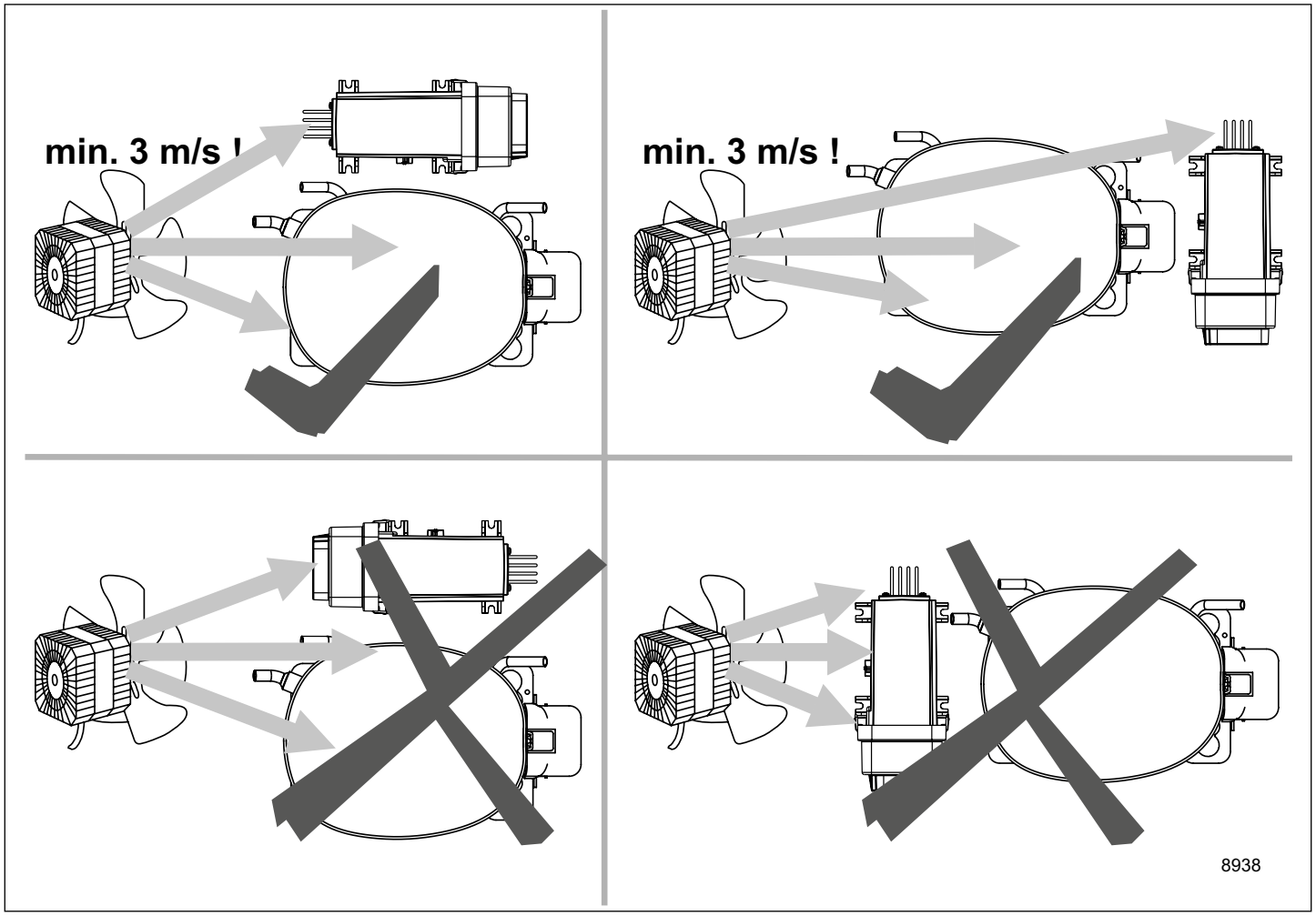

Airflow	3 m/s
Operating conditions	+ 5 °C to 43 °C - humidity < 90 % rH non condensing
Storage conditions	-25 °C to 70 °C - humidity < 90 % rH non condensing
Supply voltage	100-240 V (± 10 %)
Frequency	50/60 Hz
Input power, max.	1000 W

Dismantling, recycling, disposal: At the end of a compressor's lifecycle, proceed by separating and storing components according to their environmental impact. Parts that may cause pollution must be clearly identified and handled separately, ensuring appropriate disposal. Refrigerant gas must not be released into the environment and should be recovered by qualified operators. Compressor oil must also be collected separately. The compressor should be disposed of at specialized disposal centers in accordance with the applicable regulations. **Subject to modifications/alterations. www.secop.com**

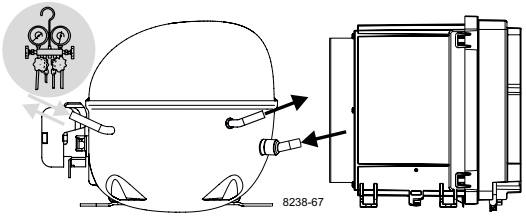

Instructions

NLV/MN-UV Compressors
220-240 V, 50/60 Hz
105N491x Series
Controllers

SECOP

Keep electrical equipment clear from oil, chemicals, and water



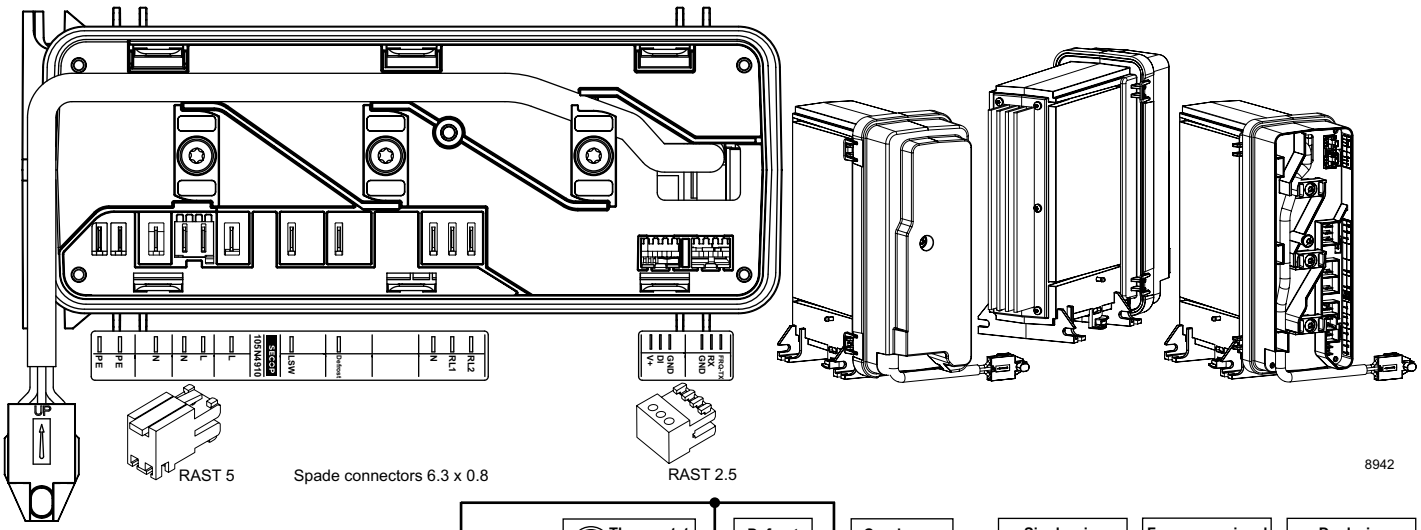

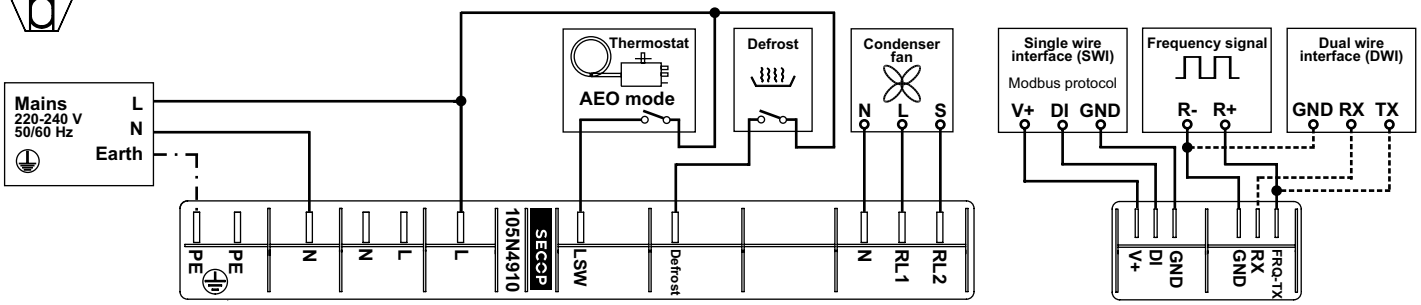

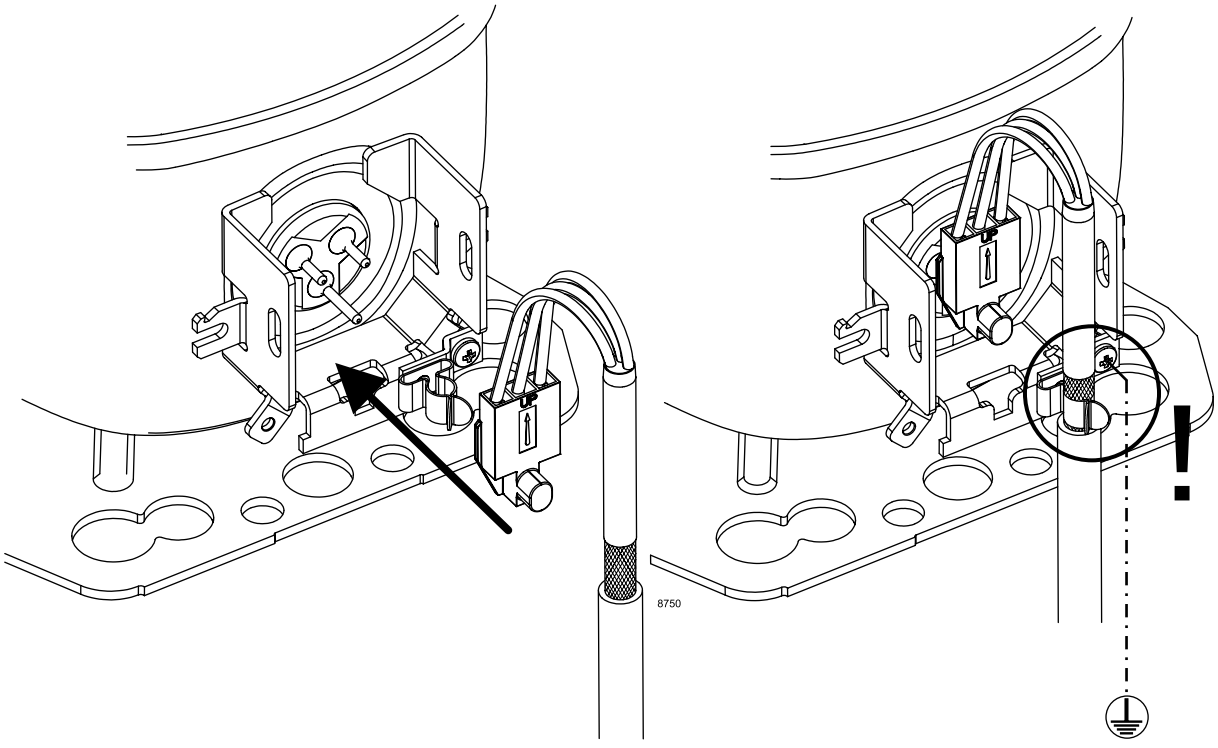

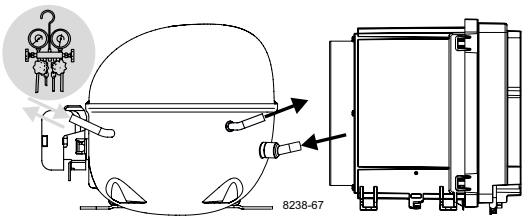

Instructions

NLV/MN-UV Compressors
220-240 V, 50/60 Hz
105N491x Series
Controllers

SECOP

Keep electrical equipment clear from oil, chemicals, and water



Service/Repair – R170, R290, R1270

(applies to all flammable refrigerants)



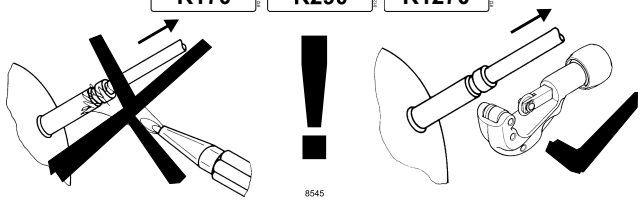

Brazing on Suction Connectors (Direct Intake)

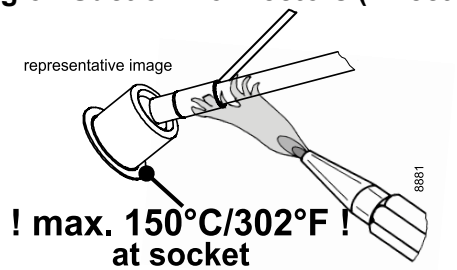

! max. 150°C/302°F ! at socket

brazing solder: phosphor (LP7) or silver

Refer to Product Bulletin: **Brazing on Suction Connectors (Compressors with Direct Suction Intake)**

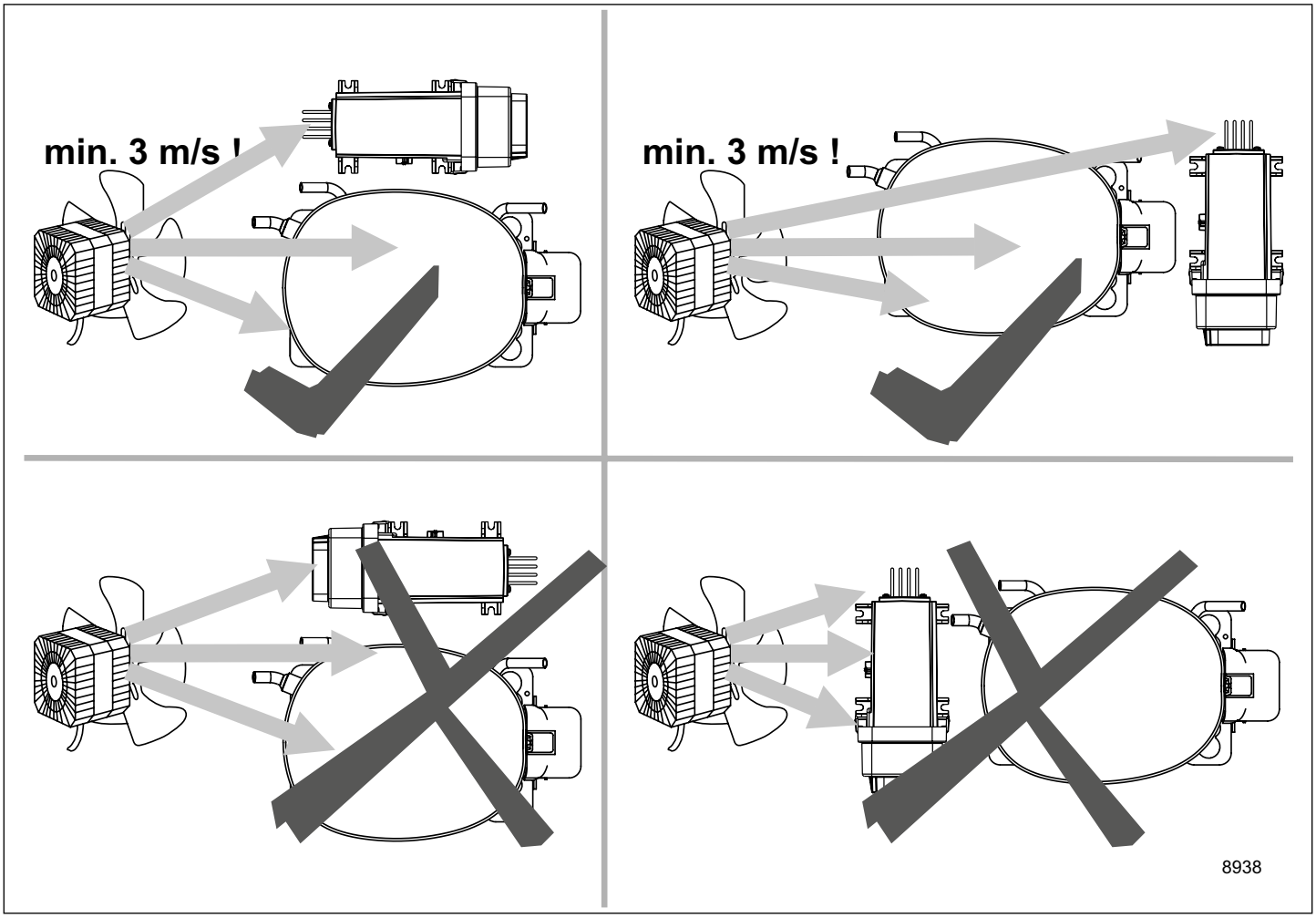

Airflow	3 m/s
Operating conditions	+ 5 °C to 43 °C - humidity < 90 % rH non condensing
Storage conditions	-25 °C to 70 °C - humidity < 90 % rH non condensing
Supply voltage	220-240 V (± 10 %)
Frequency	50/60 Hz
Input power, max.	1000 W

Dismantling, recycling, disposal: At the end of a compressor's lifecycle, proceed by separating and storing components according to their environmental impact. Parts that may cause pollution must be clearly identified and handled separately, ensuring appropriate disposal. Refrigerant gas must not be released into the environment and should be recovered by qualified operators. Compressor oil must also be collected separately. The compressor should be disposed of at specialized disposal centers in accordance with the applicable regulations. **Subject to modifications/alterations. www.secop.com**

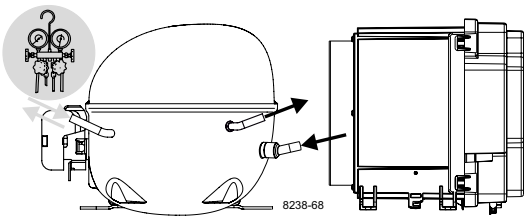

Instructions

NLV Compressors
100-240 V, 50/60 Hz
105N486x Series
Controllers

SECOP

Keep electrical equipment clear from oil, chemicals, and water



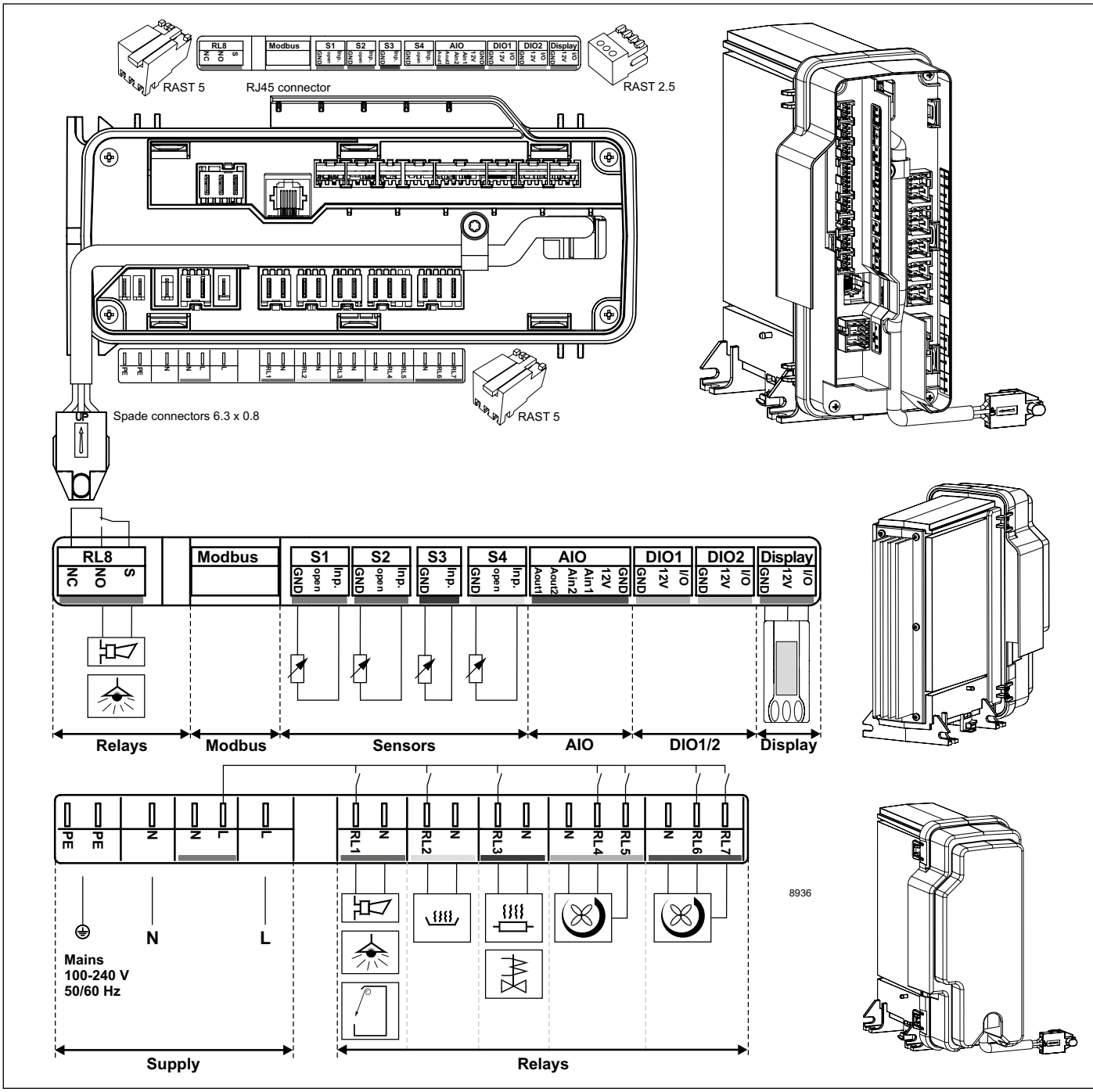

Mains	red	**S1**	red
RL 1	blue	**S2**	blue
RL 2	yellow	**S3**	black
RL 3	black	**S4**	yellow
RL 4, 5	grey	**AIO**	brown
RL 6, 7	brown	**DIO1**	grey
RL 8	green	**DIO2**	pink
		Display	green

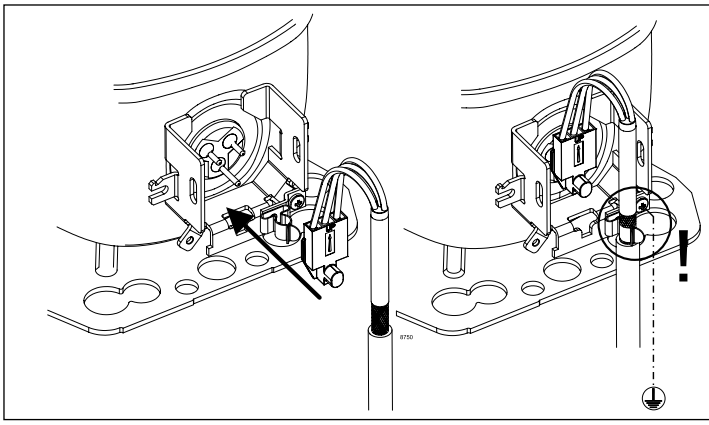

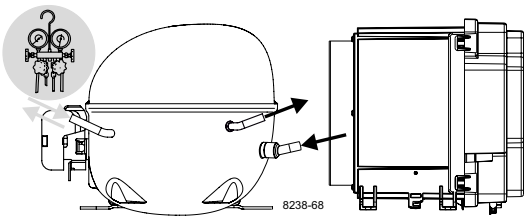

Instructions

NLV Compressors
100-240 V, 50/60 Hz
105N486x Series
Controllers

SECOP

Keep electrical equipment clear from oil, chemicals, and water



Service/Repair – R170, R290, R1270

(applies to all flammable refrigerants)



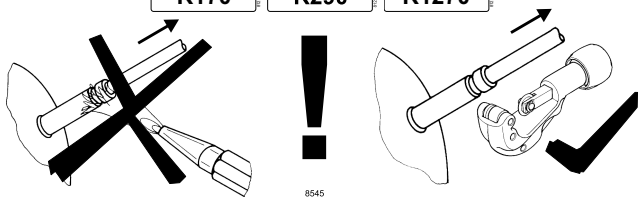

Brazing on Suction Connectors (Direct Intake)

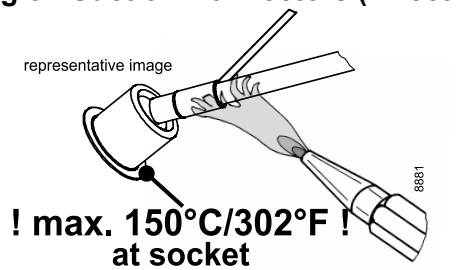

! max. 150°C/302°F ! at socket

brazing solder: phosphor (LP7) or silver

Refer to Product Bulletin: **Brazing on Suction Connectors (Compressors with Direct Suction Intake)**

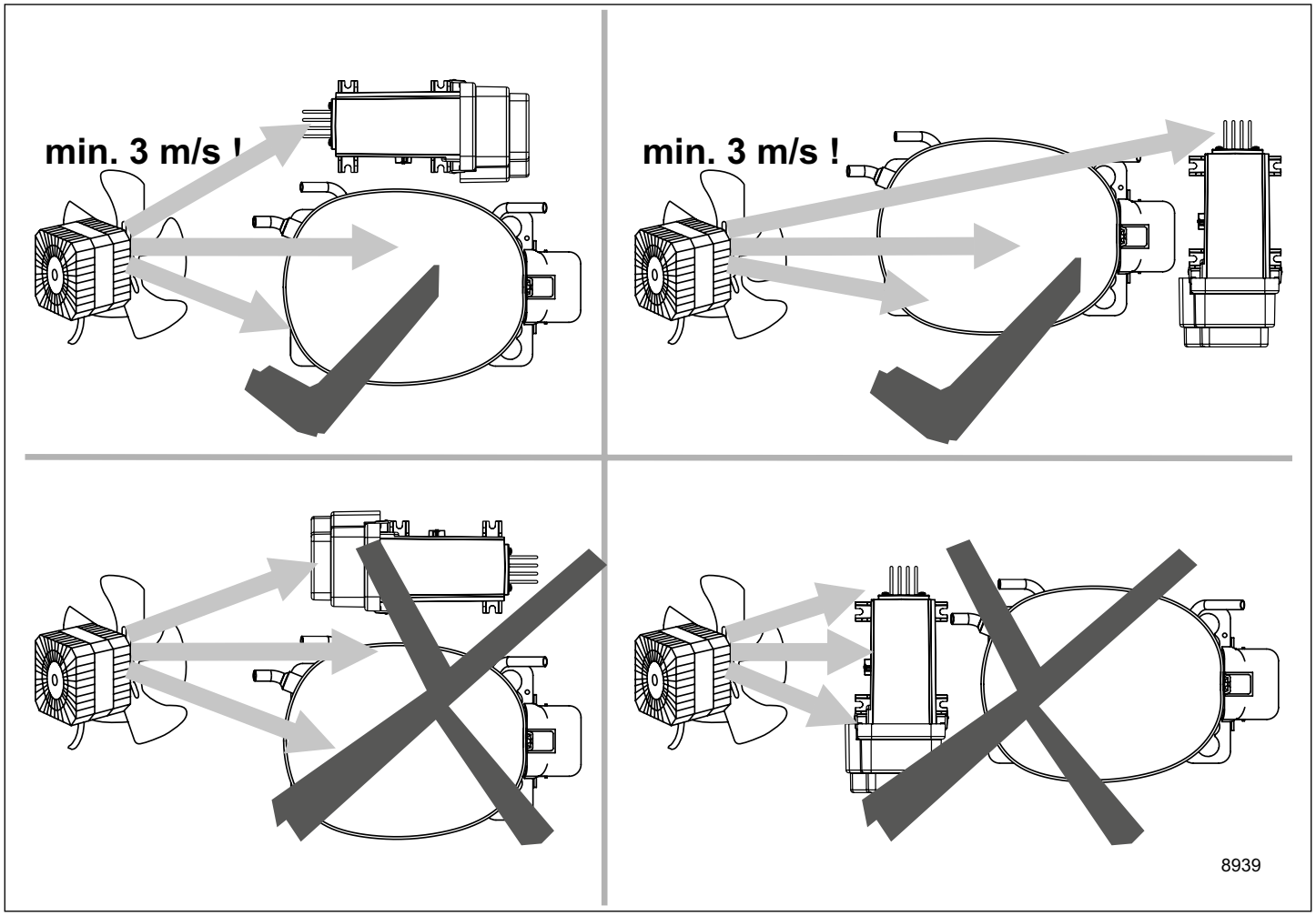

Airflow	3 m/s
Operating conditions	+ 5 °C to 43 °C - humidity < 90 % rH non condensing
Storage conditions	-25 °C to 70 °C - humidity < 90 % rH non condensing
Supply voltage	100-240 V (± 10 %)
Frequency	50/60 Hz
Input power, max.	1000 W

Dismantling, recycling, disposal: At the end of a compressor's lifecycle, proceed by separating and storing components according to their environmental impact. Parts that may cause pollution must be clearly identified and handled separately, ensuring appropriate disposal. Refrigerant gas must not be released into the environment and should be recovered by qualified operators. Compressor oil must also be collected separately. The compressor should be disposed of at specialized disposal centers in accordance with the applicable regulations. **Subject to modifications/alterations. www.secop.com**