Single
Packs

Single Pack SCE21MNX 220-240V 50Hz CSCR

Single pack code number: **195B4235**

Position	Title	Code	Amount
1	Compressor SCE21MNX	104H8160	1
2	SC starting device (550mm)	117-7800	1
3	Bolt joint for one compressor | M6 | ø16mm	118-1917	1
Below electrical equipment is pre-assembled on the compressor:			
4	Overload protector T1070/46	117U8000	1
5	Cover	117U1028	1

Secop GmbH • Lise-Meitner-Straße 29 • 24941 Flensburg, Germany • Tel: +49 461 4941 0 • **www.secop.com**

Secop accepts no responsibility for possible errors in catalogs, brochures, and other printed material. Secop reserves the right to alter its products without notice. This also applies to products already on order provided that such alterations can be made without subsequential changes being necessary to specifications already agreed. All trademarks in this material are the property of the respective companies. Secop and the Secop logotype are trademarks of Secop GmbH. All rights reserved.

Model
SCE21MNX

Sales code:
104H8160

Compressor Data

Refrigerant(s)	**R290**
Refr. charge - tech. limit	**550g / 19.40oz**
Weight	**14.20 kg / 31.31lbs**
Displacement	**20.95 cm3 / 1.28cu.in**
Compressors on pallet	**80**



General – Configurations With SCE21MNX

–	**Conf. 1**
Motor configuration	CSCR
Power supply (nominal)	220-240 V/50 Hz
Number of phases	1
Voltage range	198-254 V
Approvals	VDE, CCC, EAC
Starting torque	HST
Refrigerant	R290
Application	MBP
Hot gas defrost	OK
Long interval pull down	OK

Application Notes

- Protector and cover are included and pre-assembled to compressor.
- Provision for PE Grounding is located at the PE Stamp on the compressor

Model
SCE21MNX

Sales code:
104H8160

Compressor Design

Oil type	**POE**	Winding resistance main	**3.65 Ohm**
Oil viscosity	**32cSt**	Winding resistance aux	**14.16 Ohm**
Oil quantity	**569 / 19.24fl.oz**	Max. winding temp.	**125 °C**
Free gas volume comp.	**1,460 cm3 / 49.37fl.oz**	Max. discharge temp.	**140°C / 284°F**
Motor protection	**external**		

Compressor Dimensions

Housing

A Height	**219mm / 8.62in**
B Height	**213mm / 8.39in**
C Length shell	**218mm / 8.58in**
D Length w. cover	**255mm / 10.04in**
E Width	**151mm / 5.94in**

Find 3D Model here

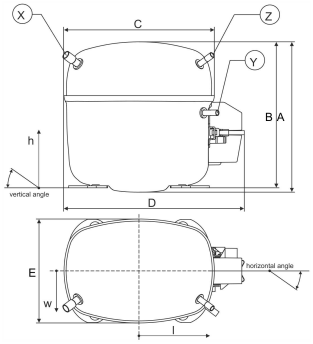

Connectors	Suction X	Discharge Y	Process Z
Diameter [mm]	øi 10.11–10.29 / 0.40–0.41in	øi 6.11–6.29 / 0.24–0.25in	øi 6.11–6.29 / 0.24–0.25in
Material	CU	CU	CU
Horizontal angle ±2°	37°	37°	143°
Vertical angle ±2°	30°	0°	150°
Position l/h/w [mm]	107/193/55 / 4.21/7.60/2.17in	115/110/63 / 4.53/4.33/2.48in	-107/193/55 / -4.21/7.60/2.17in
Straight tube l. [mm]	12 / 0.47in	12 / 0.47in	12 / 0.47in

Mounting Accessories

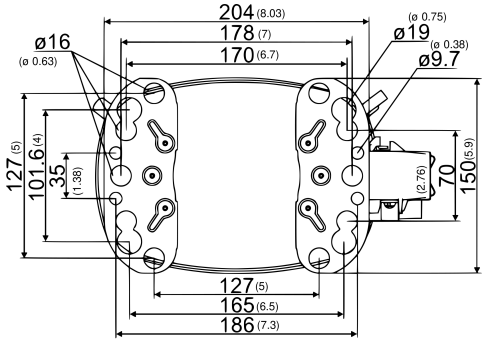

Dimensions in mm [in]

Bolt joint

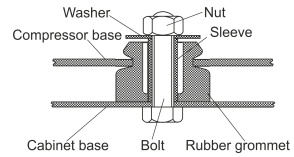

Snap-on

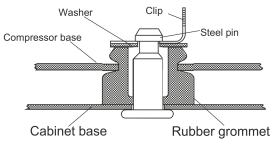

	one comp.	multi pack
Bolt joint | M6 | ø16mm	118-1917	118-1918
Bolt joint | ø1/4" | ø16mm	118-1946	–
Bolt joint | ø1/4" | ø19mm	118-1949	–
Snap-on | ø7,3 | ø16mm	118-1947	118-1919

Model
SCE21MNX Configuration 1

Sales code:
104H8160

Configuration

Motor configuration	**CSCR**
Power supply (nominal)	**220-240 V/50 Hz 1~**
Refrigerant	**R290**
Application	**MBP**
Voltage range	**198-254 V**
Starting torque	**HST**
Approvals	**VDE, CCC, EAC**
Starting device type	**relay**
Run capacitor	**10 µF**
Start capacitor	**80 µF**
LRA (locked rotor amps / 4s/ U(N))	**22.3 A**
RLA (rated load amps / 1s/ U(N))	**3.69 A**
Cut in current (U(N))	**22.3 A**

Ambient/ machine room temperatures minimum /maximum
Ambient temperature range: 10 - 43°C / 50 - 109°F
Machine room temp. compressor: 10 - 48°C / 50 - 118°F

System Cooling
fan 3m/s

Electrical Accessories / Wiring Diagram

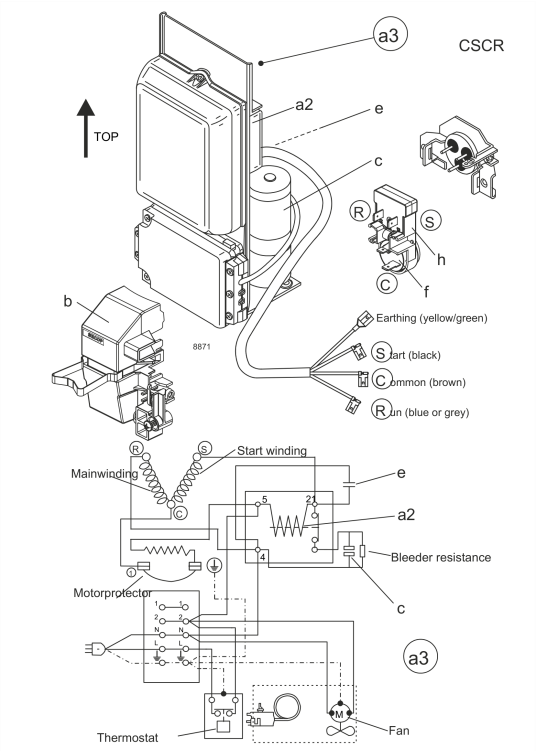

View full size

Components (protector + ~holder + cover: pre assembled)
a3 SC starter kit 117-7800
f / h motor protector assy. (T1070/46) 117U8000
b plastic cover + clamp 117U1028

Alternative components
a2 potential relay (RVA 6M3R 339) 117-7425
e run capacitor (10µF, 6.3mm) 117-7112
c start capacitor (80µF) 117U5373

Operation Pressure Range

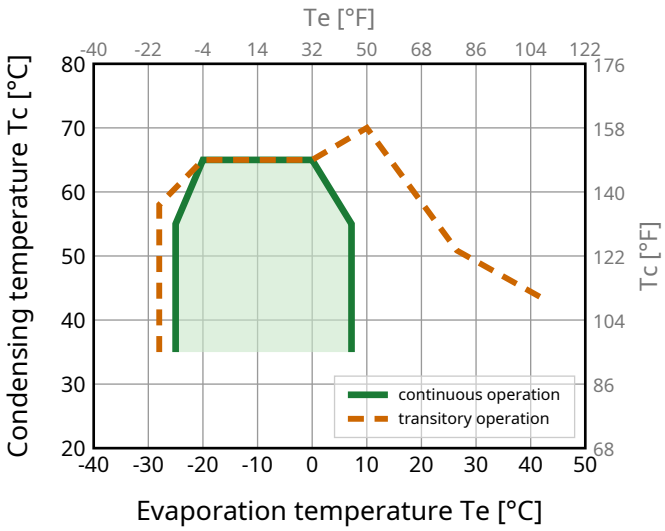

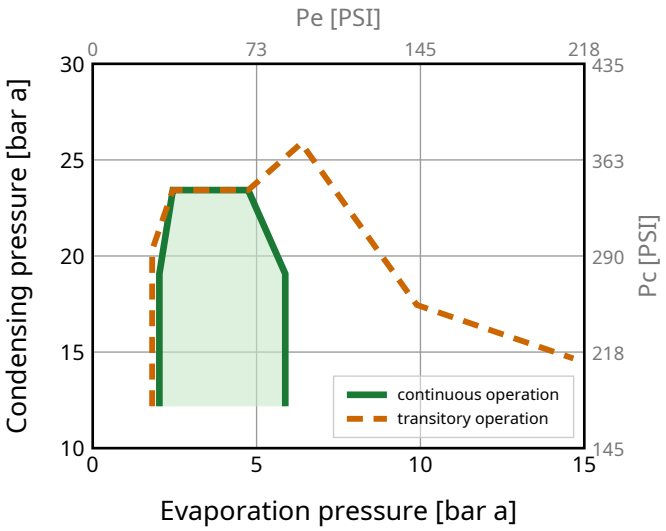

Model Sales code:

SCE21MNX Configuration 1 **104H8160**

Standard Conditions

R290, 220 V/50 Hz, CSCR, fan 3m/s

pe	pc	RGT	Tliq	Cooling capacity			COP	EER	P	I	ṁ	
[°C] [°F]	[°C] [°F]	[°C] [°F]	[°C] [°F]	[W]	[Btu/h]	[kcal/h]	[W/W]	[Btu/Wh]	[W]	[A]	[kg/h]	
-6.7 20	54.4 129.9	35 95	46.1 115	**1764**	6017	1517	**2.12**	7.22	833	4.06	20.19	**ASHRAE MBP**
-10 14	55 131	32 89.6	55 131	**1409**	4806	1211	**1.77**	6.04	796	3.89	17.91	**CECOMAF MBP**
-10 14	45 113	20 68	45 113	**1574**	5372	1354	**2.17**	7.42	724	3.57	19.38	**EN12900 MBP**
-6.7 20	48.8 119.8	18.3 64.9	48.8 119.8	**1667**	5687	1433	**2.12**	7.24	785	3.84	21.67	**ARI540 MBP**
-10 14	45 113	32 89.6	45 113	**1637**	5585	1408	**2.26**	7.71	724	3.57	18.80	**opt MBP 1**
-25 -13	45 113	32 89.6	45 113	**897**	3062	772	**1.60**	5.47	560	2.88	10.17	**opt MBP 2**

Performance Tables

R290, 220 V/50 Hz, CSCR, fan 3m/s

pc= 45/113 | RGT= 32/89.6 | Tliq= 45/113 | °C/°F

pe		Cooling capacity			COP	EER	P	I	ṁ
[°C]	[°F]	[W]	[Btu/h]	[kcal/h]	[W/W]	[Btu/Wh]	[W]	[A]	[kg/h]
-25	-13	**897**	3062	772	**1.60**	5.47	560	2.88	10.17
-20	-4	**1115**	3804	959	**1.81**	6.18	616	3.11	12.69
-15	5	**1358**	4635	1168	**2.02**	6.91	671	3.34	15.52
-10	14	**1637**	5585	1408	**2.26**	7.71	724	3.57	18.80
-5	23	**1960**	6688	1686	**2.54**	8.65	773	3.79	22.64
0	32	**2338**	7977	2011	**2.86**	9.76	817	3.98	27.19
5	41	**2780**	9486	2391	**3.25**	11.09	855	4.15	32.58
7.2	45	**2998**	10227	2578	**3.45**	11.76	870	4.22	35.26

pc= 55/131 | RGT= 32/89.6 | Tliq= 55/131 | °C/°F

-25	-13	**739**	2522	636	**1.25**	4.27	591	3.00	9.27
-20	-4	**945**	3225	813	**1.43**	4.88	661	3.30	11.90
-15	5	**1165**	3975	1002	**1.60**	5.45	730	3.60	14.73
-10	14	**1409**	4806	1211	**1.77**	6.04	796	3.89	17.91
-5	23	**1686**	5751	1450	**1.96**	6.69	859	4.17	21.57
0	32	**2006**	6843	1725	**2.19**	7.46	917	4.43	25.86
5	41	**2378**	8115	2045	**2.45**	8.37	969	4.67	30.94
7.2	45	**2562**	8740	2203	**2.59**	8.83	989	4.76	33.46

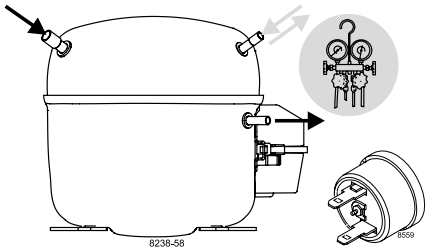

SCE Compressors
(External Protector)

SECOP

Keep electrical equipment clear from <u>oil, chemicals, and water</u>

When operated with a <u>flammable refrigerant,</u> only <u>spark-proof starting equipment</u> is allowed.

CSIR

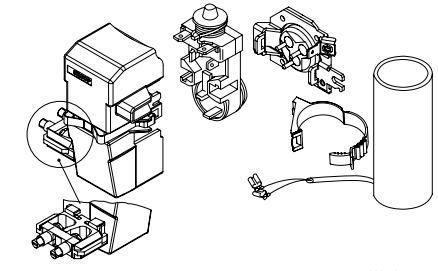

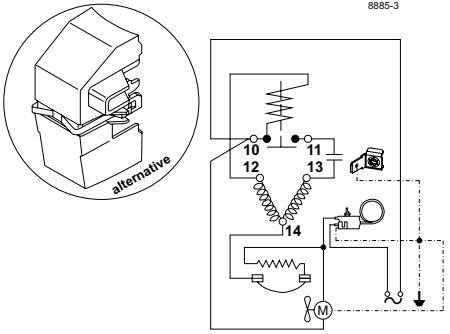

CSCR

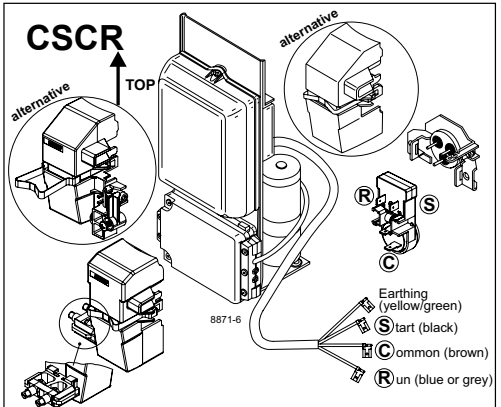

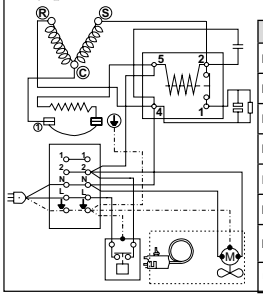

	S	C	R
ENGLISH	Black	Brown	Blue or grey
DEUTSCH	Schwarz	Braun	Blau od. grau
FRANÇAIS	Noir	Marron	Bleu ou gris
ESPAÑOL	Negro	Marrón	Azul o gris
ITALIANO	Nero	Marrone	Blu o grigio
NEDERLANDS	Zwart	Bruin	Blauw of grijs
РУССКИЙ	Чёрный	Корич-невый	Синий или серый
中文	黑色	棕色	蓝色或灰色

CSCR

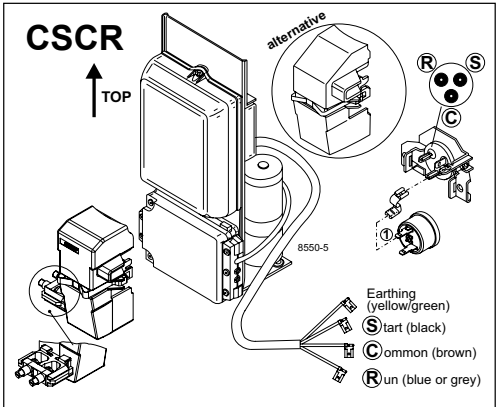

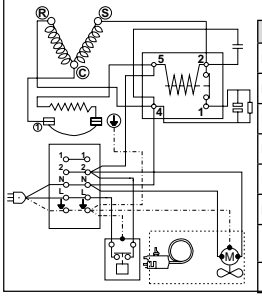

	S	C	R
ENGLISH	Black	Brown	Blue or grey
DEUTSCH	Schwarz	Braun	Blau od. grau
FRANÇAIS	Noir	Marron	Bleu ou gris
ESPAÑOL	Negro	Marrón	Azul o gris
ITALIANO	Nero	Marrone	Blu o grigio
NEDERLANDS	Zwart	Bruin	Blauw of grijs
РУССКИЙ	Чёрный	Корич-невый	Синий или серый
中文	黑色	棕色	蓝色或灰色

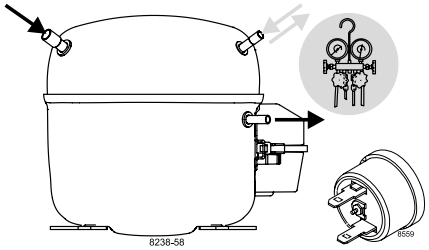

SCE Compressors
(External Protector)

SECOP

Keep electrical equipment clear from oil, chemicals, and water

When operated with a flammable refrigerant, only spark-proof starting equipment is allowed.

Service/Repair – R290, R600a, R170, R1270, R1234yf
(applies to all flammable refrigerants)

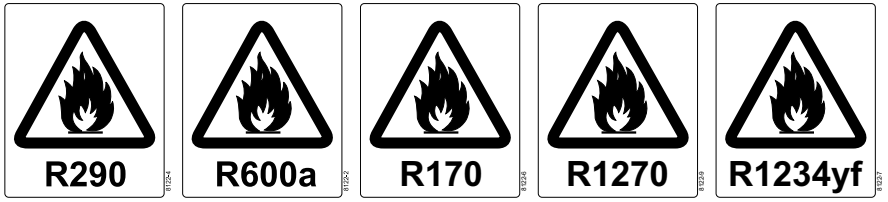

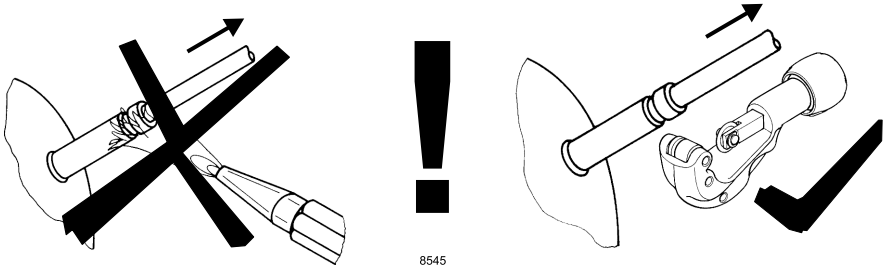

Brazing on Suction Connectors (Direct Intake)

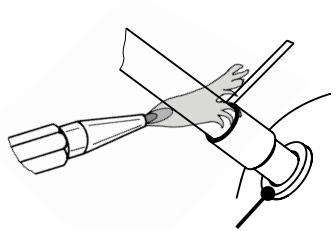

! max. 350°C/662°F !
at socket

brazing solder: phosphor (LP7) or silver

Refer to Product Bulletin:
Brazing on Suction Connectors
(SCE Compressors with Direct Suction Intake)

Dismantling, recycling, disposal: At the end of a compressor's lifecycle, proceed by separating and storing components according to their environmental impact. Parts that may cause pollution must be clearly identified and handled separately, ensuring appropriate disposal. Refrigerant gas must not be released into the environment and should be recovered by qualified operators. Compressor oil must also be collected separately. The compressor should be disposed of at specialized disposal centers in accordance with the applicable regulations. **Subject to modifications/alterations. www.secop.com**