Single
Packs

Single Pack SC18MNX 220-240V 50Hz CSIR

Single pack code number: **195B4053**

Position	Title	Code	Amount
1	Compressor SC18MNX	104H8875	1
2	Starting relay	117U7011	1
3	Starting capacitor (80µF 220V, 6.3mm)	117U5017	1
4	Cord relief	103N1004	1
5	Cover	103N2008	1
6	Bolt joint for one compressor | M6 | ø16mm	118-1917	1

Secop GmbH • Lise-Meitner-Straße 29 • 24941 Flensburg, Germany • Tel: +49 461 4941 0 • **www.secop.com**

Secop accepts no responsibility for possible errors in catalogs, brochures, and other printed material. Secop reserves the right to alter its products without notice. This also applies to products already on order provided that such alterations can be made without subsequential changes being necessary to specifications already agreed. All trademarks in this material are the property of the respective companies. Secop and the Secop logotype are trademarks of Secop GmbH. All rights reserved.

Model
SC18MNX

Sales code:
104H8875

Compressor Data

Refrigerant(s)	**R290**
Refr. charge - tech. limit	**150g / 5.29oz**
Weight	**14.00 kg / 30.86lbs**
Displacement	**17.69 cm3 / 1.08cu.in**
Compressors on pallet	**80**



General – Configurations With SC18MNX

–	**Conf. 1**
Motor configuration	CSIR
Power supply (nominal)	220-240 V/50 Hz
Number of phases	1
Voltage range	198-254 V
Approvals	CCC, EAC, VDE
Starting torque	HST
Refrigerant	R290
Application	MBP
Hot gas defrost	OK
Long interval pull down	OK

Application Notes

- Provision for PE Grounding is located at the PE Stamp on the compressor

Model
SC18MNX

Sales code:
104H8875

Compressor Design

Oil type	**POE**	Winding resistance main	**3.4 Ohm**
Oil viscosity	**32cSt**	Winding resistance aux	**14.4 Ohm**
Oil quantity	**550 / 18.60fl.oz**	Max. winding temp.	**125 °C**
Free gas volume comp.	**1,460 cm3 / 49.37fl.oz**	Max. discharge temp.	**135°C / 275°F**
Motor protection	**internal**		

Compressor Dimensions

Housing

A Height	**219mm / 8.62in**
B Height	**213mm / 8.39in**
C Length shell	**218mm / 8.58in**
D Length w. cover	**255mm / 10.04in**
E Width	**151mm / 5.94in**

Find 3D Model here

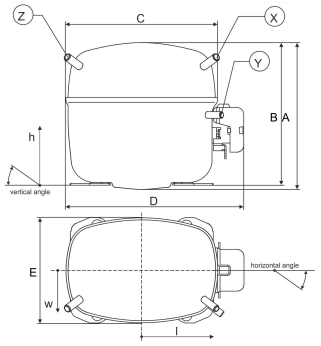

Connectors	Suction X	Discharge Y	Process Z
Diameter [mm]	øi 8.11–8.29 / 0.32–0.33in	øi 6.11–6.29 / 0.24–0.25in	øi 6.11–6.29 / 0.24–0.25in
Material	CU	CU	CU
Horizontal angle ±2°	37°	37°	143°
Vertical angle ±2°	30°	0°	150°
Position l/h/w [mm]	107/193/55 / 4.21/7.60/2.17in	115/110/63 / 4.53/4.33/2.48in	-107/193/55 / -4.21/7.60/2.17in
Straight tube l. [mm]	12 / 0.47in	12 / 0.47in	12 / 0.47in

Mounting Accessories

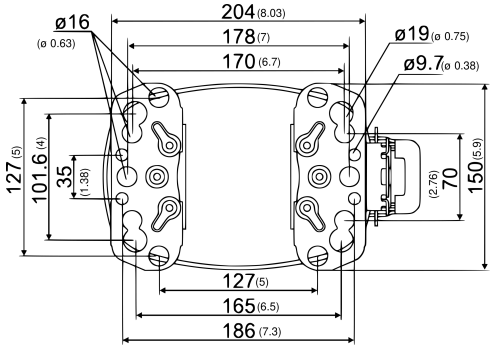

Dimensions in mm [in]

Bolt joint

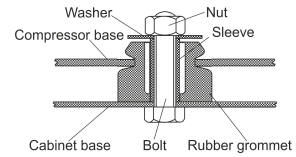

Snap-on

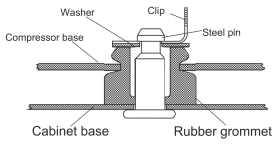

	one comp.	multi pack
Bolt joint | M6 | ø16mm	118-1917	118-1918
Bolt joint | ø1/4" | ø16mm	118-1946	–
Bolt joint | ø1/4" | ø19mm	118-1949	–
Snap-on | ø7,3 | ø16mm	118-1947	118-1919

Model
SC18MNX Configuration 1

Sales code:
104H8875

Configuration

Motor configuration	**CSIR**
Power supply (nominal)	**220-240 V/50 Hz 1~**
Refrigerant	**R290**
Application	**MBP**
Voltage range	**198-254 V**
Starting torque	**HST**
Approvals	**CCC, EAC, VDE**
Starting device type	**relay**
Run capacitor	**-/-**
Start capacitor	**80 µF**
RLA (rated load amps / 1s/ U(N))	**-/-A**

Ambient/ machine room temperatures minimum /maximum
Ambient temperature range: 10 - 43°C / 50 - 109°F
Machine room temp. compressor: 10 - 48°C / 50 - 118°F

System Cooling
fan 3m/s

Electrical Accessories / Wiring Diagram

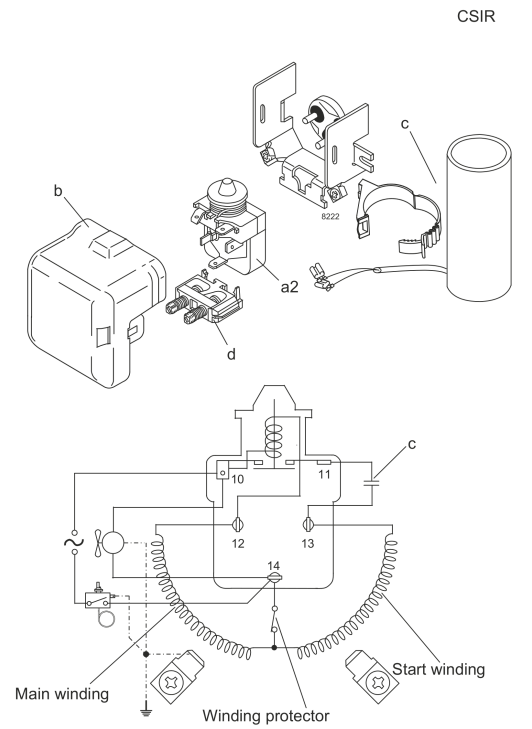

View full size

Components
a2 relay 117U7011
c start capacitor (80µF) 117U5017
d cord relief 103N1004
b plastic cover 103N2009

Alternative components
b plastic cover 103N2008

Operation Pressure Range

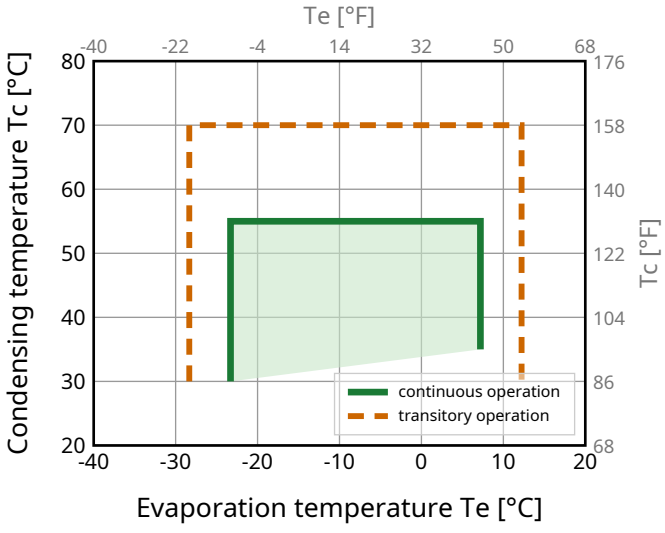

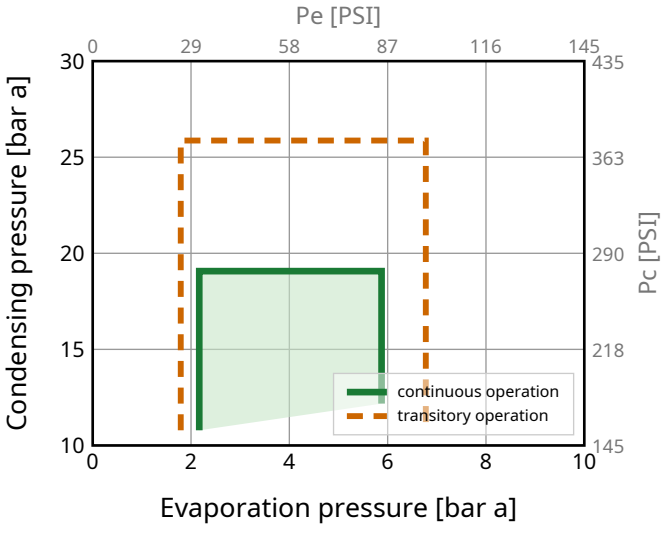

Model

SC18MNX Configuration 1

Sales code:

104H8875

Standard Conditions

R290, 220 V/50 Hz, CSIR, fan 3m/s

pe	pc	RGT	Tliq	Cooling capacity			COP	EER	P	I	ṁ	
[°C] [°F]	[°C] [°F]	[°C] [°F]	[°C] [°F]	[W]	[Btu/h]	[kcal/h]	[W/W]	[Btu/Wh]	[W]	[A]	[kg/h]	
-6.7 20	54.4 129.9	35 95	46.1 115	**1365**	4659	1174	**1.71**	5.83	799	4.74	15.63	**ASHRAE MBP**
-10 14	55 131	32 89.6	55 131	**1088**	3712	936	**1.42**	4.86	764	4.61	13.83	**CECOMAF MBP**
-10 14	45 113	20 68	45 113	**1206**	4114	1037	**1.69**	5.77	713	4.41	14.84	**EN12900 MBP**
-6.7 20	48.8 119.8	18.3 64.9	48.8 119.8	**1282**	4375	1103	**1.67**	5.71	766	4.60	16.67	**ARI540 MBP**
-10 14	45 113	32 89.6	45 113	**1254**	4277	1078	**1.76**	6.00	713	4.41	14.39	**opt MBP 1**
-25 -13	45 113	32 89.6	45 113	**675**	2303	580	**1.22**	4.17	552	3.90	7.65	**opt MBP 2**

Performance Tables

R290, 220 V/50 Hz, CSIR, fan 3m/s

pc= 45/113 | RGT= 32/89.6 | Tliq= 45/113 | °C/°F

pe		Cooling capacity			COP	EER	P	I	ṁ
[°C]	[°F]	[W]	[Btu/h]	[kcal/h]	[W/W]	[Btu/Wh]	[W]	[A]	[kg/h]
-23.3	-10	**730**	2492	628	**1.27**	4.34	574	3.97	8.29
-20	-4	**844**	2881	726	**1.38**	4.70	612	4.08	9.61
-15	5	**1035**	3532	890	**1.56**	5.31	665	4.25	11.83
-10	14	**1254**	4277	1078	**1.76**	6.00	713	4.41	14.39
-5	23	**1506**	5138	1295	**1.99**	6.79	757	4.56	17.39
0	32	**1798**	6136	1547	**2.25**	7.68	799	4.71	20.91
5	41	**2137**	7291	1838	**2.54**	8.66	842	4.87	25.04
7.2	45	**2302**	7855	1980	**2.67**	9.12	861	4.95	27.08

pc= 55/131 | RGT= 32/89.6 | Tliq= 55/131 | °C/°F

-23.3	-10	**628**	2144	540	**1.06**	3.60	595	4.02	7.89
-20	-4	**729**	2488	627	**1.14**	3.88	640	4.17	9.18
-15	5	**897**	3059	771	**1.27**	4.34	704	4.39	11.34
-10	14	**1088**	3712	936	**1.42**	4.86	764	4.61	13.83
-5	23	**1309**	4466	1126	**1.59**	5.43	822	4.83	16.75
0	32	**1566**	5343	1347	**1.78**	6.07	880	5.05	20.19
5	41	**1865**	6364	1604	**1.99**	6.78	939	5.28	24.26
7.2	45	**2012**	6864	1730	**2.08**	7.11	966	5.39	26.28

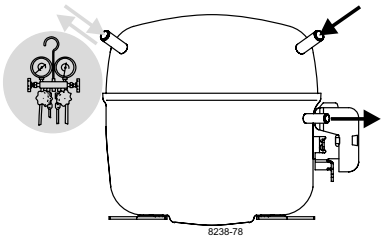

SC Compressors

SECOP

Keep electrical equipment clear from oil, chemicals, and water

When operated with a flammable refrigerant, only spark-proof starting equipment is allowed.

RSIR

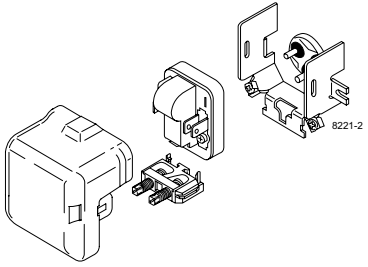

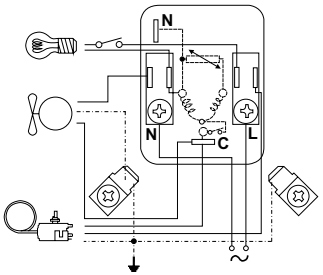

CSIR

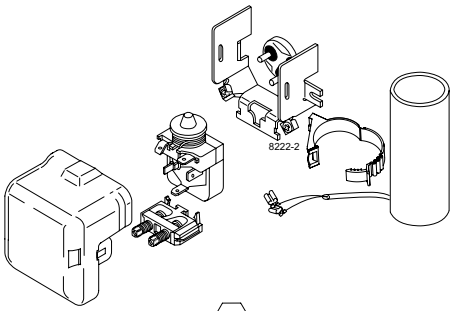

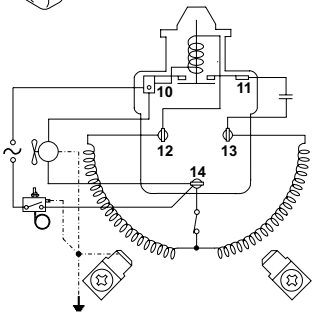

CSCR

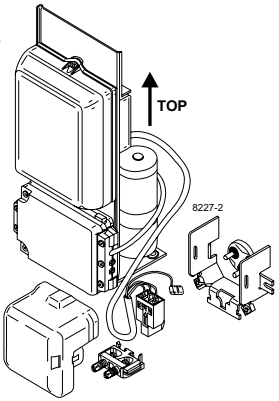

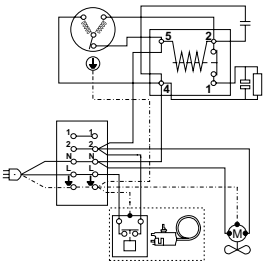

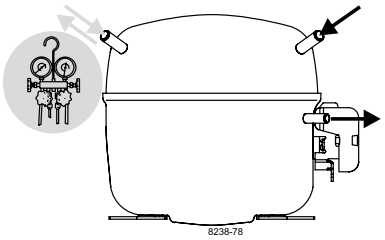

SC Compressors

SECOP

Keep electrical equipment clear from oil, chemicals, and water

When operated with a flammable refrigerant, only spark-proof starting equipment is allowed.

Service/Repair – R290, R600a, R170, R1270, R1234yf

(applies to all flammable refrigerants)

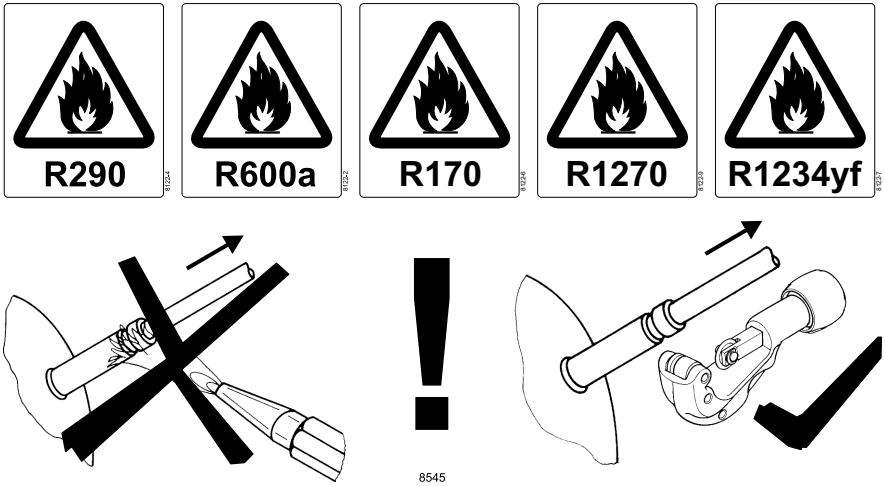

CSCR

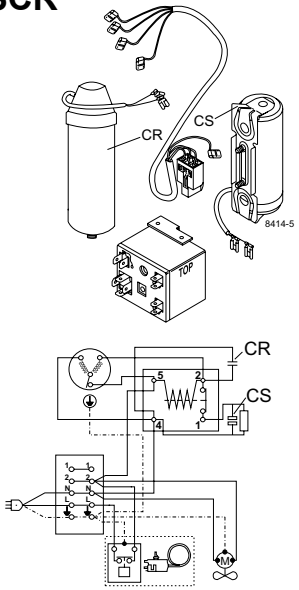

Dismantling, recycling, disposal: At the end of a compressor's lifecycle, proceed by separating and storing components according to their environmental impact. Parts that may cause pollution must be clearly identified and handled separately, ensuring appropriate disposal. Refrigerant gas must not be released into the environment and should be recovered by qualified operators. Compressor oil must also be collected separately. The compressor should be disposed of at specialized disposal centers in accordance with the applicable regulations. **Subject to modifications/alterations. www.secop.com**