Single
Packs

Single Pack SC18CNX.2 220-240V 50Hz CSIR

Single pack code number: **195B4198**

Position	Title	Code	Amount
1	Compressor SC18CNX.2	104H8866	1
2	Starting relay	117U7011	1
3	Starting capacitor (80µF 220V, 6.3mm)	117U5017	1
4	Cord relief	103N1004	1
5	Cover	103N2009	1
6	Bolt joint for one compressor | M6 | ø16mm	118-1917	1

Secop GmbH • Lise-Meitner-Straße 29 • 24941 Flensburg, Germany • Tel: +49 461 4941 0 • **www.secop.com**

Secop accepts no responsibility for possible errors in catalogs, brochures, and other printed material. Secop reserves the right to alter its products without notice. This also applies to products already on order provided that such alterations can be made without subsequential changes being necessary to specifications already agreed. All trademarks in this material are the property of the respective companies. Secop and the Secop logotype are trademarks of Secop GmbH. All rights reserved.

Model
SC18CNX.2

Sales code:
104H8866

Compressor Data

Refrigerant(s)	**R290**
Refr. charge - tech. limit	**150g / 5.29oz**
Weight	**14.00 kg / 30.86lbs**
Displacement	**17.69 cm3 / 1.08cu.in**
Compressors on pallet	**80**



General – Configurations With SC18CNX.2

–	**Conf. 1**
Motor configuration	CSIR
Power supply (nominal)	220-240 V/50 Hz
Number of phases	1
Voltage range	198-254 V
Approvals	VDE, CCC
Starting torque	HST
Refrigerant	R290
Application	LBP
Hot gas defrost	OK
Long interval pull down	OK

Application Notes

- Provision for PE Grounding is located at the PE Stamp on the compressor

Model
SC18CNX.2

Sales code:
104H8866

Compressor Design

Oil type	**POE**	Winding resistance main	**4 Ohm**
Oil viscosity	**22cSt**	Winding resistance aux	**13.1 Ohm**
Oil quantity	**550 / 18.60fl.oz**	Max. winding temp.	**125 °C**
Free gas volume comp.	**1,410 cm3 / 47.68fl.oz**	Max. discharge temp.	**135°C / 275°F**
Motor protection	**internal**		

Compressor Dimensions

Housing

A Height	**219mm / 8.62in**
B Height	**213mm / 8.39in**
C Length shell	**218mm / 8.58in**
D Length w. cover	**255mm / 10.04in**
E Width	**151mm / 5.94in**

Find 3D Model here

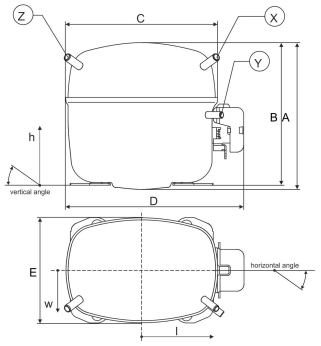

Connectors	Suction X	Discharge Y	Process Z
Diameter [mm]	øi 10.11–10.29 / 0.40–0.41in	øi 6.11–6.29 / 0.24–0.25in	øi 6.11–6.29 / 0.24–0.25in
Material	CU	CU	CU
Horizontal angle ±2°	37°	37°	143°
Vertical angle ±2°	30°	0°	150°
Position l/h/w [mm]	107/193/55 / 4.21/7.60/2.17in	115/110/63 / 4.53/4.33/2.48in	-107/193/55 / -4.21/7.60/2.17in
Straight tube l. [mm]	12 / 0.47in	12 / 0.47in	12 / 0.47in

Mounting Accessories

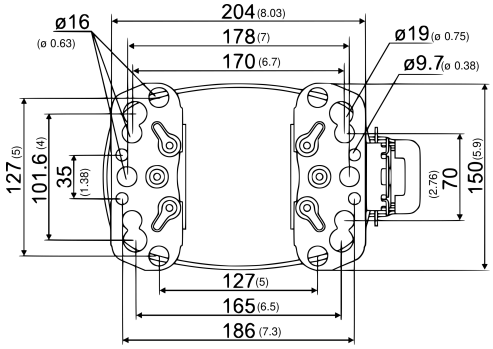

Dimensions in mm [in]

Bolt joint

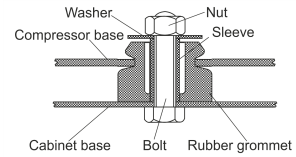

Snap-on

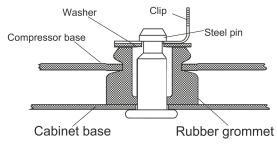

	one comp.	multi pack
Bolt joint | M6 | ø16mm	118-1917	118-1918
Bolt joint | ø1/4" | ø16mm	118-1946	–
Bolt joint | ø1/4" | ø19mm	118-1949	–
Snap-on | ø7,3 | ø16mm	118-1947	118-1919

Model
SC18CNX.2 Configuration 1

Sales code:
104H8866

Configuration

Motor configuration	**CSIR**
Power supply (nominal)	**220-240 V/50 Hz 1~**
Refrigerant	**R290**
Application	**LBP**
Voltage range	**198-254 V**
Starting torque	**HST**
Approvals	**VDE, CCC**
Starting device type	**relay**
Run capacitor	**-/-**
Start capacitor	**80 µF**
LRA (locked rotor amps / 4s/ U(N))	**19.5 A**
RLA (rated load amps / 1s/ U(N))	**3.8 A**
Cut in current (U(N))	**19.5 A**

Ambient/ machine room temperatures minimum /maximum
Ambient temperature range: 10 - 43°C / 50 - 109°F
Machine room temp. compressor: 10 - 48°C / 50 - 118°F

System Cooling
fan 3m/s

Electrical Accessories / Wiring Diagram

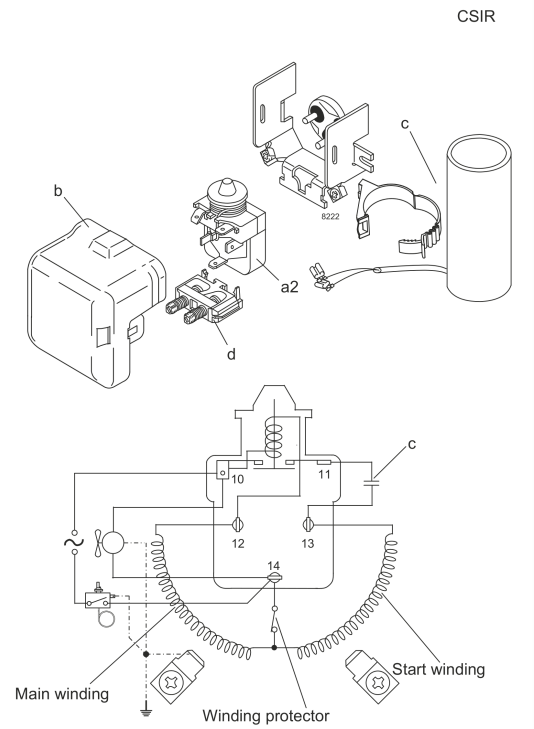

View full size

Components
a2 relay 117U7011
c start capacitor (80µF) 117U5017
d cord relief 103N1004
b plastic cover 103N2009

Alternative components
b plastic cover 103N2008

Operation Pressure Range

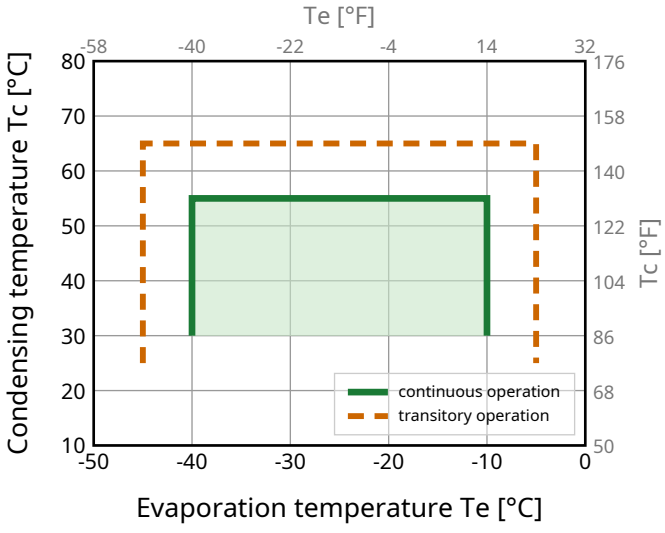

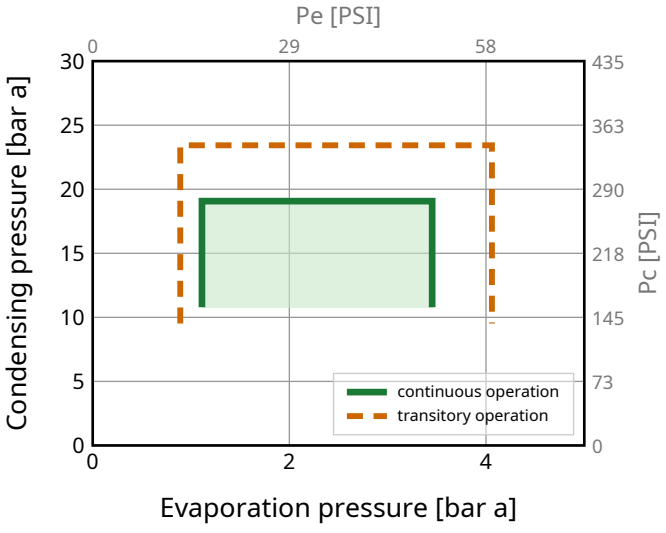

Model

SC18CNX.2 Configuration 1

Sales code:

104H8866

Standard Conditions

R290, 220 V/50 Hz, CSIR, fan 3m/s

pe	pc	RGT	Tliq	Cooling capacity			COP	EER	P	I	ṁ	
[°C] [°F]	[°C] [°F]	[°C] [°F]	[°C] [°F]	[W]	[Btu/h]	[kcal/h]	[W/W]	[Btu/Wh]	[W]	[A]	[kg/h]	
-23.3 -10	54.4 129.9	32.2 90	32.2 90	**800**	2729	688	**1.31**	4.47	610	3.88	8.12	**ASHRAE LBP**
-25 -13	55 131	32 89.6	55 131	**587**	2003	505	**1.00**	3.41	588	3.82	7.36	**CECOMAF LBP**
-35 -31	40 104	20 68	40 104	**430**	1467	370	**1.01**	3.45	425	3.20	4.93	**EN12900 LBP**
-23.3 -10	48.8 119.8	4.4 39.9	48.8 119.8	**644**	2196	553	**1.12**	3.81	577	3.66	8.94	**ARI540 LBP**
-23.3 -10	40.6 105.1	32.2 90	32.2 90	**850**	2902	731	**1.57**	5.37	540	3.54	8.64	**AHAM LBP**
-35 -31	45 113	32 89.6	45 113	**384**	1309	330	**0.92**	3.14	417	3.15	4.32	**opt LBP**

Performance Tables

R290, 220 V/50 Hz, CSIR, fan 3m/s

pc= 45/113 | RGT= 32/89.6 | Tliq= 45/113 | °C/°F

pe		Cooling capacity			COP	EER	P	I	ṁ
[°C]	[°F]	[W]	[Btu/h]	[kcal/h]	[W/W]	[Btu/Wh]	[W]	[A]	[kg/h]
-40	-40	**244**	833	210	**0.72**	2.47	337	2.96	2.75
-35	-31	**384**	1309	330	**0.92**	3.14	417	3.15	4.32
-30	-22	**531**	1811	456	**1.10**	3.74	484	3.34	6.00
-25	-13	**689**	2352	593	**1.27**	4.35	541	3.52	7.81
-20	-4	**864**	2946	743	**1.46**	4.98	591	3.69	9.82
-15	5	**1057**	3606	909	**1.66**	5.66	637	3.85	12.07
-10	14	**1273**	4345	1095	**1.87**	6.37	682	4.01	14.62

pc= 55/131 | RGT= 32/89.6 | Tliq= 55/131 | °C/°F

-40	-40	**136**	462	117	**0.47**	1.59	290	3.03	1.68
-35	-31	**275**	938	236	**0.68**	2.32	404	3.30	3.42
-30	-22	**424**	1447	365	**0.84**	2.88	502	3.57	5.30
-25	-13	**587**	2003	505	**1.00**	3.41	588	3.82	7.36
-20	-4	**768**	2619	660	**1.16**	3.95	663	4.07	9.66
-15	5	**970**	3309	834	**1.32**	4.52	732	4.31	12.26
-10	14	**1197**	4085	1030	**1.50**	5.12	798	4.55	15.22

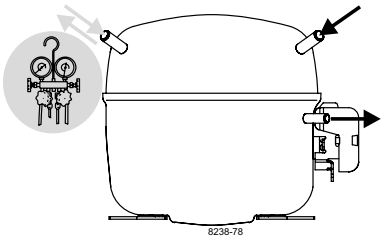

SC Compressors

SECOP

Keep electrical equipment clear from oil, chemicals, and water

When operated with a flammable refrigerant, only spark-proof starting equipment is allowed.

RSIR

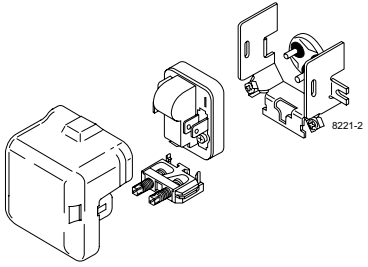

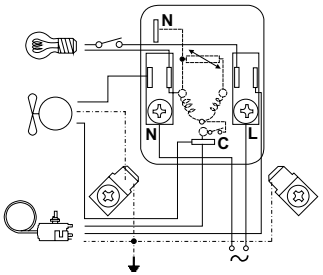

CSIR

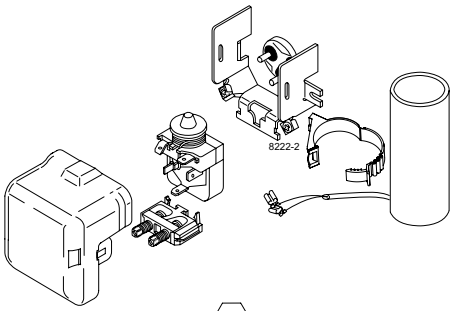

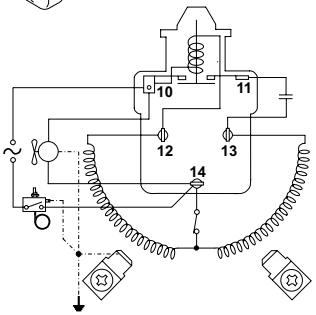

CSCR

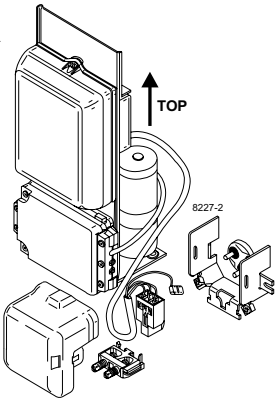

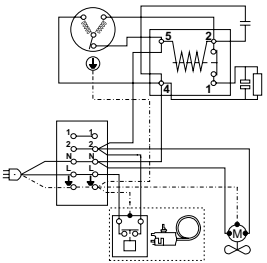

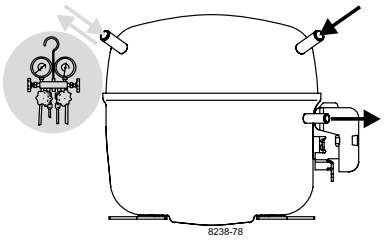

SC Compressors

SECOP

Keep electrical equipment clear from oil, chemicals, and water

When operated with a flammable refrigerant, only spark-proof starting equipment is allowed.

Service/Repair – R290, R600a, R170, R1270, R1234yf

(applies to all flammable refrigerants)

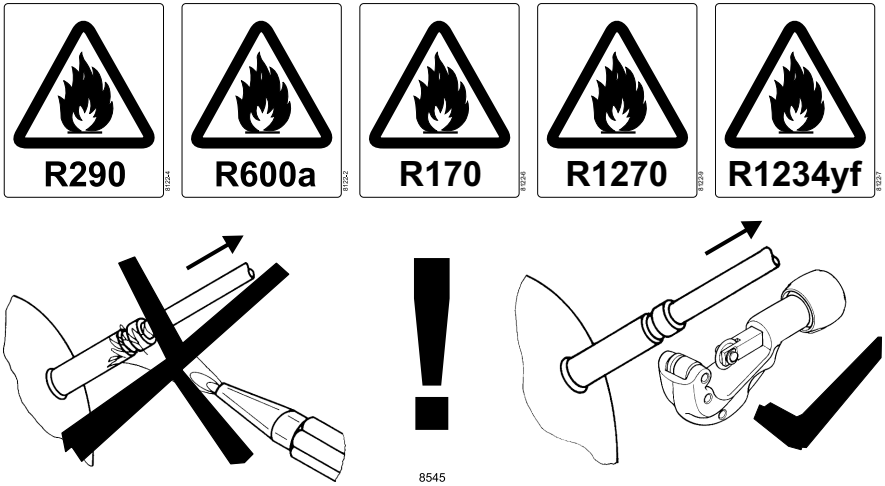

CSCR

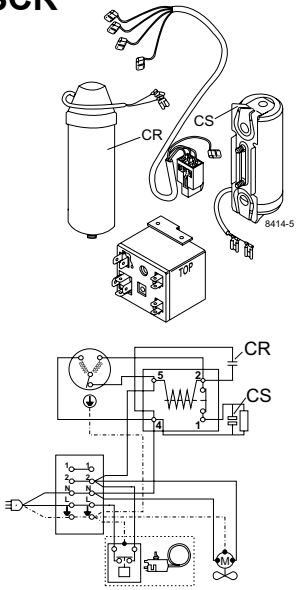

Dismantling, recycling, disposal: At the end of a compressor's lifecycle, proceed by separating and storing components according to their environmental impact. Parts that may cause pollution must be clearly identified and handled separately, ensuring appropriate disposal. Refrigerant gas must not be released into the environment and should be recovered by qualified operators. Compressor oil must also be collected separately. The compressor should be disposed of at specialized disposal centers in accordance with the applicable regulations. **Subject to modifications/alterations. www.secop.com**