Single
Packs

Single Pack NLE12.6MN 220-240V 50Hz CSIR

Single pack code number: **195B4196**

Position	Title	Code	Amount
1	Compressor NLE12.6MN	105H6377	1
2	Starting relay	117U7011	1
3	Starting capacitor (80µF 220V, 6.3mm)	117U5015	1
4	Cord relief	103N1010	1
5	Cover	103N2010	1
6	Bolt joint for one compressor | M6 | ø16mm	118-1917	1

Secop GmbH • Lise-Meitner-Straße 29 • 24941 Flensburg, Germany • Tel: +49 461 4941 0 • **www.secop.com**

Secop accepts no responsibility for possible errors in catalogs, brochures, and other printed material. Secop reserves the right to alter its products without notice. This also applies to products already on order provided that such alterations can be made without subsequential changes being necessary to specifications already agreed. All trademarks in this material are the property of the respective companies. Secop and the Secop logotype are trademarks of Secop GmbH. All rights reserved.

Model
NLE12.6MN

Sales code:
105H6377

Compressor Data

Refrigerant(s)	**R290**
Refr. charge - tech. limit	**300g / 10.58oz**
Weight	**12.10 kg / 26.68lbs**
Displacement	**12.55 cm3 / 0.77cu.in**
Compressors on pallet	**80**



General – Configurations With NLE12.6MN

–	**Conf. 1**	**Conf. 2**	**Conf. 3**
Motor configuration	CSIR	eRSIR	eRSCR
Power supply (nominal)	220-240 V/50 Hz	220-240 V/50 Hz	220-240 V/50 Hz
Number of phases	1	1	1
Voltage range	198-254 V	198-254 V	198-254 V
Approvals	VDE, CCC, EAC	VDE, CCC, EAC	VDE, CCC, EAC
Starting torque	HST	LST	LST
Refrigerant	R290	R290	R290
Application	LBP+MBP	LBP+MBP	LBP+MBP
Hot gas defrost	OK	OK	OK
Long interval pull down	OK	OK	OK

Application Notes

- Provision for PE Grounding is located at the PE Stamp on the compressor

Model
NLE12.6MN

Sales code:
105H6377

Compressor Design

Oil type	**POE**	Winding resistance main	**5 Ohm**
Oil viscosity	**32cSt**	Winding resistance aux	**9.9 Ohm**
Oil quantity	**298 / 10.08fl.oz**	Max. winding temp.	**125 °C**
Free gas volume comp.	**2,360 cm3 / 79.80fl.oz**	Max. discharge temp.	**130°C / 266°F**
Motor protection	**internal**		

Compressor Dimensions

Housing

A Height	**203mm / 7.99in**
B Height	**197mm / 7.76in**
C Length shell	**205mm / 8.07in**
D Length w. cover	**254mm / 10.00in**
E Width	**166mm / 6.54in**

Find 3D Model here

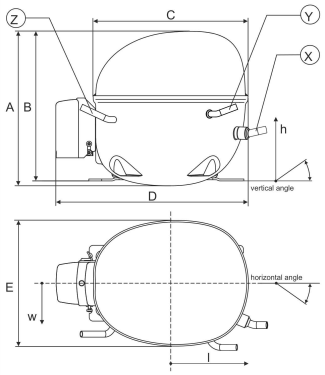

Connectors	Suction X	Discharge Y	Process Z
Diameter [mm]	øi 8.11–8.29 / 0.32–0.33in	øi 6.11–6.29 / 0.24–0.25in	øi 6.11–6.29 / 0.24–0.25in
Material	CU	CU	CU
Horizontal angle ±2°	0°	0°	0°
Vertical angle ±2°	15°	21°	155°
Position l/h/w [mm]	132/68.5/56.7 / 5.20/2.70/2.23in	94/101.7/81 / 3.70/4.00/3.19in	-109.3/94.3/72 / -4.30/3.71/2.83in
Straight tube l. [mm]	12 / 0.47in	12 / 0.47in	12 / 0.47in

Mounting Accessories

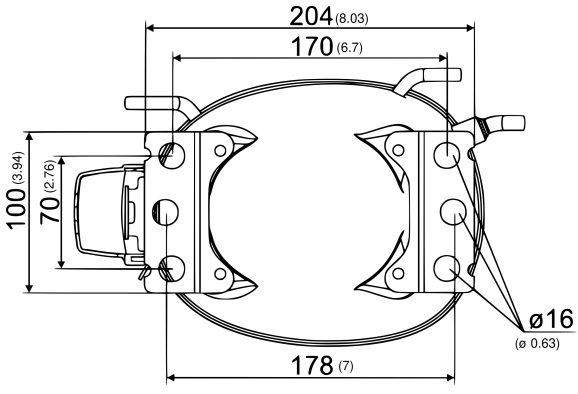

Dimensions in mm [in]

Bolt joint

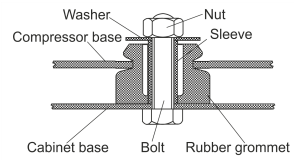

Snap-on

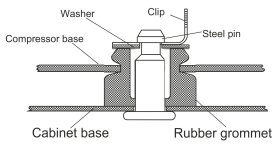

	one comp.	multi pack
Bolt joint | M6 | ø16mm	118-1917	118-1918
Bolt joint | ø1/4" | ø16mm	118-1946	–
Snap-on | ø7,3 | ø16mm	118-1947	118-1919

Model
NLE12.6MN Configuration 1

Sales code:
105H6377

Configuration

Motor configuration	**CSIR**
Power supply (nominal)	**220-240 V/50 Hz 1~**
Refrigerant	**R290**
Application	**LBP+MBP**
Voltage range	**198-254 V**
Starting torque	**HST**
Approvals	**VDE, CCC, EAC**
Starting device type	**relay**
Run capacitor	**-/-**
Start capacitor	**80 µF**
LRA (locked rotor amps / 4s/ U(N))	**15.6 A**
RLA (rated load amps / 1s/ U(N))	**2.7 A**
Cut in current (U(N))	**21.2 A**

Ambient/ machine room temperatures minimum /maximum
Ambient temperature range: 10 - 43°C / 50 - 109°F
Machine room temp. compressor: 10 - 48°C / 50 - 118°F

System Cooling
fan 3m/s

Electrical Accessories / Wiring Diagram

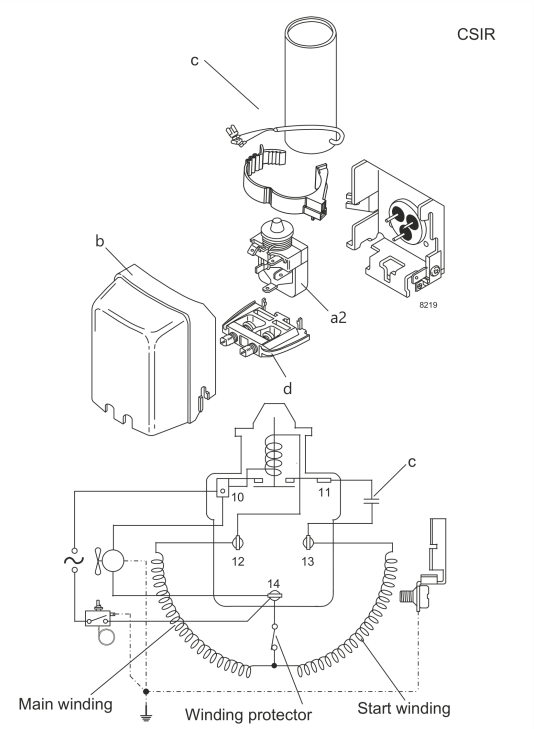

View full size

Components
a2 relay 117U7011
c start capacitor (80µF) 117U5015
b plastic cover 103N2010
d cord relief 103N1010

Alternative components
b plastic cover 103N2011

Operation Pressure Range

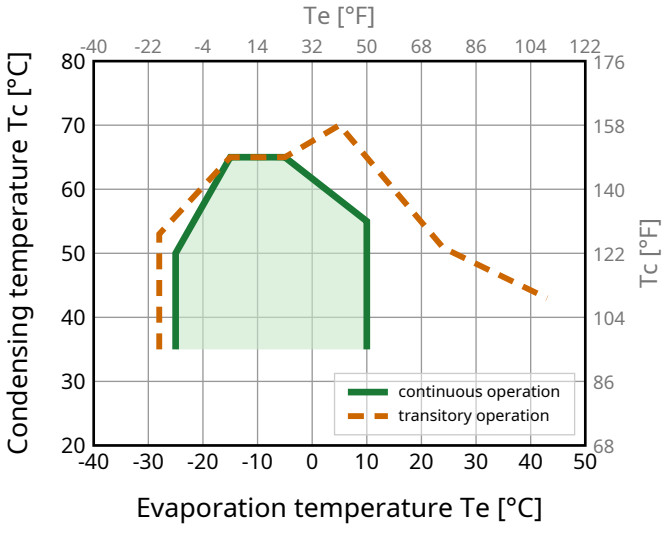

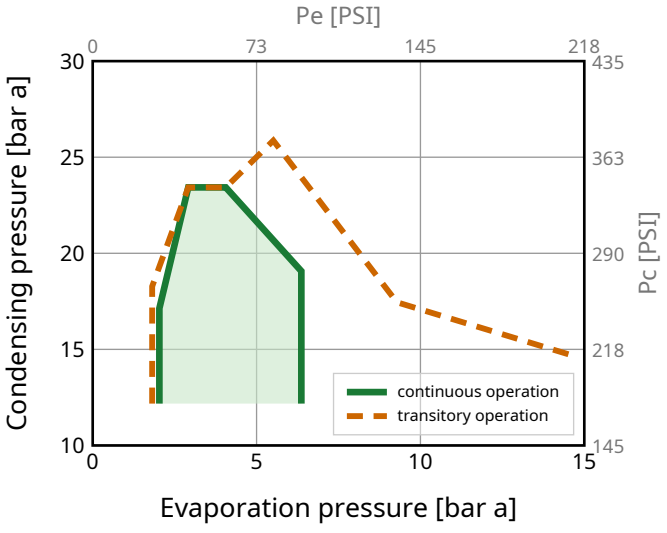

Model
NLE12.6MN Configuration 1

Sales code:
105H6377

Standard Conditions

R290, 220 V/50 Hz, CSIR, fan 3m/s

pe	pc	RGT	Tliq	Cooling capacity			COP	EER	P	I	ṁ	
[°C] [°F]	[°C] [°F]	[°C] [°F]	[°C] [°F]	[W]	[Btu/h]	[kcal/h]	[W/W]	[Btu/Wh]	[W]	[A]	[kg/h]	
-23.3 -10	54.4 129.9	32.2 90	32.2 90	**604**	2060	519	**1.57**	5.34	386	2.54	6.13	**ASHRAE LBP**
-25 -13	55 131	32 89.6	55 131	**452**	1541	388	**1.21**	4.14	373	2.49	5.66	**CECOMAF LBP**
-35 -31	40 104	20 68	40 104	**362**	1237	312	**1.33**	4.54	272	2.14	4.16	**EN12900 LBP**
-6.7 20	54.4 129.9	35 95	46.1 115	**1061**	3619	912	**1.98**	6.74	537	3.10	12.14	**ASHRAE MBP**
-10 14	55 131	32 89.6	55 131	**843**	2875	725	**1.66**	5.66	508	2.99	10.72	**CECOMAF MBP**
-10 14	45 113	20 68	45 113	**950**	3242	817	**2.06**	7.01	462	2.77	11.70	**EN12900 MBP**

Performance Tables

R290, 220 V/50 Hz, CSIR, fan 3m/s

pc= 45/113 | RGT= 32/89.6 | Tliq= 45/113 | °C/°F

pe		Cooling capacity			COP	EER	P	I	ṁ
[°C]	[°F]	[W]	[Btu/h]	[kcal/h]	[W/W]	[Btu/Wh]	[W]	[A]	[kg/h]
-25	-13	**536**	1830	461	**1.53**	5.21	352	2.41	6.08
-20	-4	**663**	2262	570	**1.71**	5.83	388	2.52	7.54
-15	5	**813**	2774	699	**1.91**	6.52	425	2.65	9.29
-10	14	**988**	3371	850	**2.14**	7.29	462	2.77	11.34
-5	23	**1190**	4059	1023	**2.38**	8.13	499	2.91	13.74
0	32	**1420**	4844	1221	**2.65**	9.06	535	3.06	16.51
5	41	**1680**	5731	1445	**2.96**	10.08	568	3.22	19.69
10	50	**1972**	6728	1696	**3.29**	11.22	600	3.39	23.32

pc= 55/131 | RGT= 32/89.6 | Tliq= 55/131 | °C/°F

-25	-13	**452**	1541	388	**1.21**	4.14	373	2.49	5.66
-20	-4	**562**	1916	483	**1.35**	4.62	415	2.65	7.07
-15	5	**691**	2359	595	**1.50**	5.13	460	2.81	8.74
-10	14	**843**	2875	725	**1.66**	5.66	508	2.99	10.72
-5	23	**1017**	3470	875	**1.83**	6.23	557	3.18	13.02
0	32	**1216**	4150	1046	**2.00**	6.83	608	3.39	15.69
5	41	**1442**	4921	1240	**2.19**	7.47	659	3.61	18.76
10	50	**1696**	5788	1459	**2.39**	8.15	710	3.85	22.29

Model
NLE12.6MN Configuration 2

Sales code:
105H6377

Configuration

Motor configuration	**eRSIR**
Power supply (nominal)	**220-240 V/50 Hz 1~**
Refrigerant	**R290**
Application	**LBP+MBP**
Voltage range	**198-254 V**
Starting torque	**LST**
Approvals	**VDE, CCC, EAC**
Starting device type	**e-PTC**
Run capacitor	**-/-**
Start capacitor	**-/-**
LRA (locked rotor amps / 4s/ U(N))	**15.6 A**
RLA (rated load amps / 1s/ U(N))	**2.7 A**
Cut in current (U(N))	**21.2 A**

Ambient/ machine room temperatures minimum /maximum
Ambient temperature range: 10 - 43°C / 50 - 109°F
Machine room temp. compressor: 10 - 48°C / 50 - 118°F

System Cooling
fan 3m/s

Electrical Accessories / Wiring Diagram

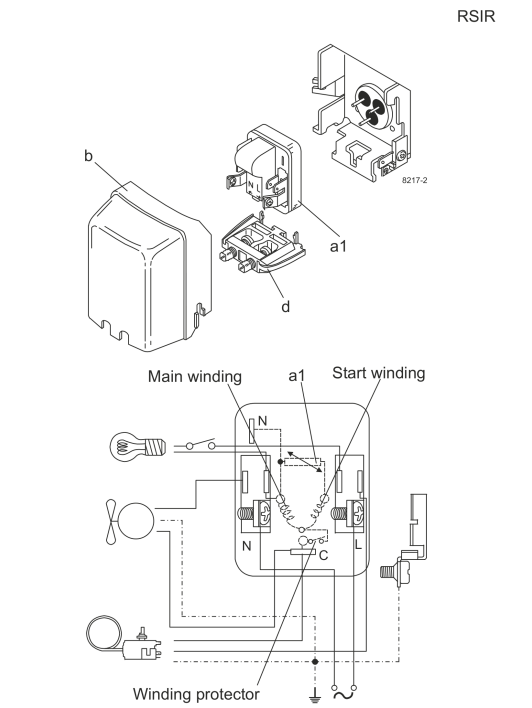

Components
a1 e-PTC starter (220V, 25Ohm, 4.8mm) 103N0050
b plastic cover 103N2010
d cord relief 103N1010

Alternative components
b plastic cover 103N2011

Operation Pressure Range

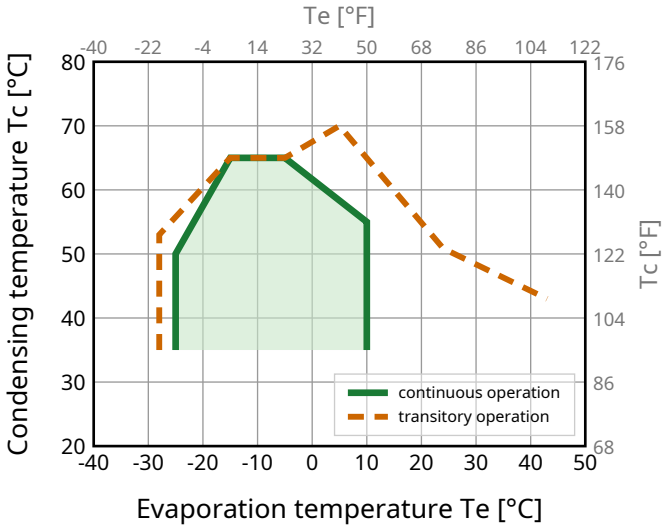

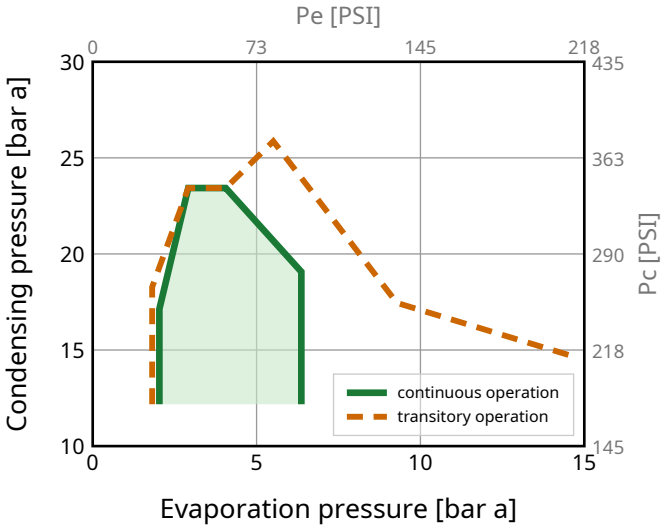

Model
NLE12.6MN Configuration 2

Sales code:
105H6377

Standard Conditions

R290, 220 V/50 Hz, eRSIR, fan 3m/s

pe	pc	RGT	Tliq	Cooling capacity			COP	EER	P	I	ṁ	
[°C] [°F]	[°C] [°F]	[°C] [°F]	[°C] [°F]	[W]	[Btu/h]	[kcal/h]	[W/W]	[Btu/Wh]	[W]	[A]	[kg/h]	
-23.3 -10	54.4 129.9	32.2 90	32.2 90	**604**	2060	519	**1.57**	5.34	386	2.54	6.13	**ASHRAE LBP**
-25 -13	55 131	32 89.6	55 131	**452**	1541	388	**1.21**	4.14	373	2.49	5.66	**CECOMAF LBP**
-35 -31	40 104	20 68	40 104	**362**	1237	312	**1.33**	4.54	272	2.14	4.16	**EN12900 LBP**
-6.7 20	54.4 129.9	35 95	46.1 115	**1061**	3619	912	**1.98**	6.74	537	3.10	12.14	**ASHRAE MBP**
-10 14	55 131	32 89.6	55 131	**843**	2875	725	**1.66**	5.66	508	2.99	10.72	**CECOMAF MBP**
-10 14	45 113	20 68	45 113	**950**	3242	817	**2.06**	7.01	462	2.77	11.70	**EN12900 MBP**

Performance Tables

R290, 220 V/50 Hz, eRSIR, fan 3m/s

pc= 45/113 | RGT= 32/89.6 | Tliq= 45/113 | °C/°F

pe		Cooling capacity			COP	EER	P	I	ṁ
[°C]	[°F]	[W]	[Btu/h]	[kcal/h]	[W/W]	[Btu/Wh]	[W]	[A]	[kg/h]
-25	-13	**536**	1830	461	**1.53**	5.21	352	2.41	6.08
-20	-4	**663**	2262	570	**1.71**	5.83	388	2.52	7.54
-15	5	**813**	2774	699	**1.91**	6.52	425	2.65	9.29
-10	14	**988**	3371	850	**2.14**	7.29	462	2.77	11.34
-5	23	**1190**	4059	1023	**2.38**	8.13	499	2.91	13.74
0	32	**1420**	4844	1221	**2.65**	9.06	535	3.06	16.51
5	41	**1680**	5731	1445	**2.96**	10.08	568	3.22	19.69
10	50	**1972**	6728	1696	**3.29**	11.22	600	3.39	23.32

pc= 55/131 | RGT= 32/89.6 | Tliq= 55/131 | °C/°F

-25	-13	**452**	1541	388	**1.21**	4.14	373	2.49	5.66
-20	-4	**562**	1916	483	**1.35**	4.62	415	2.65	7.07
-15	5	**691**	2359	595	**1.50**	5.13	460	2.81	8.74
-10	14	**843**	2875	725	**1.66**	5.66	508	2.99	10.72
-5	23	**1017**	3470	875	**1.83**	6.23	557	3.18	13.02
0	32	**1216**	4150	1046	**2.00**	6.83	608	3.39	15.69
5	41	**1442**	4921	1240	**2.19**	7.47	659	3.61	18.76
10	50	**1696**	5788	1459	**2.39**	8.15	710	3.85	22.29

Model
NLE12.6MN Configuration 3

Sales code:
105H6377

Configuration

Motor configuration	**eRSCR**
Power supply (nominal)	**220-240 V/50 Hz 1~**
Refrigerant	**R290**
Application	**LBP+MBP**
Voltage range	**198-254 V**
Starting torque	**LST**
Approvals	**VDE, CCC, EAC**
Starting device type	**e-PTC**
Run capacitor	**4 µF**
Start capacitor	**-/-**
LRA (locked rotor amps / 4s/ U(N))	**15.6 A**
RLA (rated load amps / 1s/ U(N))	**2.7 A**
Cut in current (U(N))	**21.2 A**

Ambient/ machine room temperatures minimum /maximum
Ambient temperature range: 10 - 43°C / 50 - 109°F
Machine room temp. compressor: 10 - 48°C / 50 - 118°F

System Cooling
fan 3m/s

Electrical Accessories / Wiring Diagram

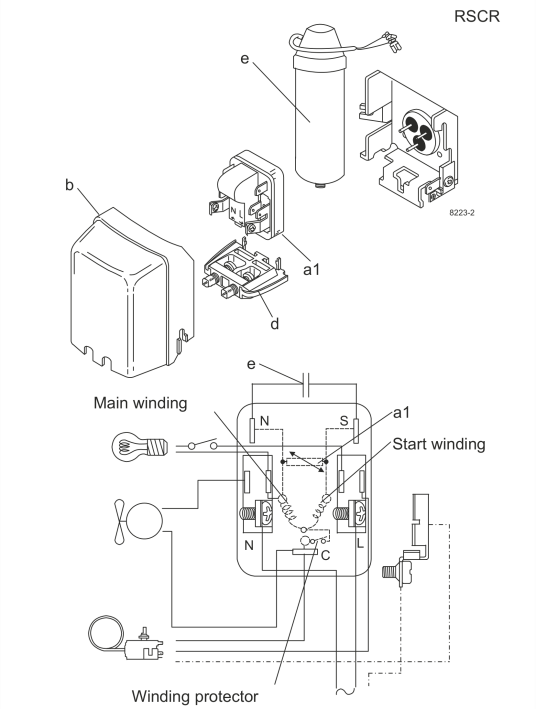

Components
a1 e-PTC starter (220V, 25Ohm, 4.8mm) 103N0050
e run capacitor (4µF, 4.8mm) 117-7119
b plastic cover 103N2010
d cord relief 103N1010
bracket for run capacitor 117-0300
screw M4x8mm 117-0301

Alternative components
b plastic cover 103N2011

Operation Pressure Range

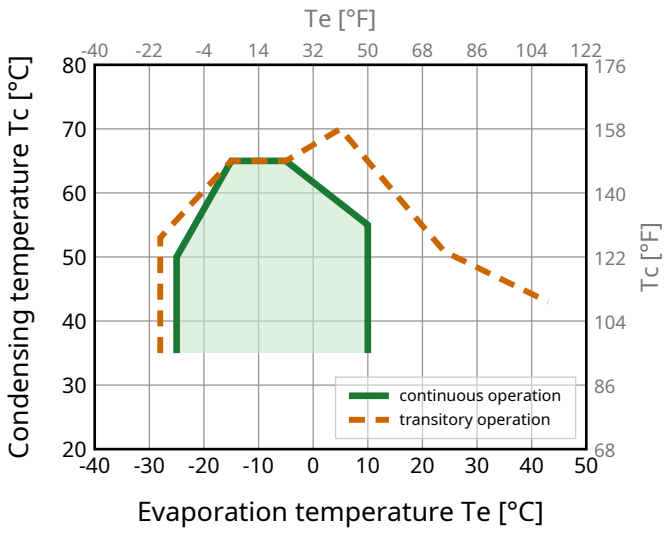

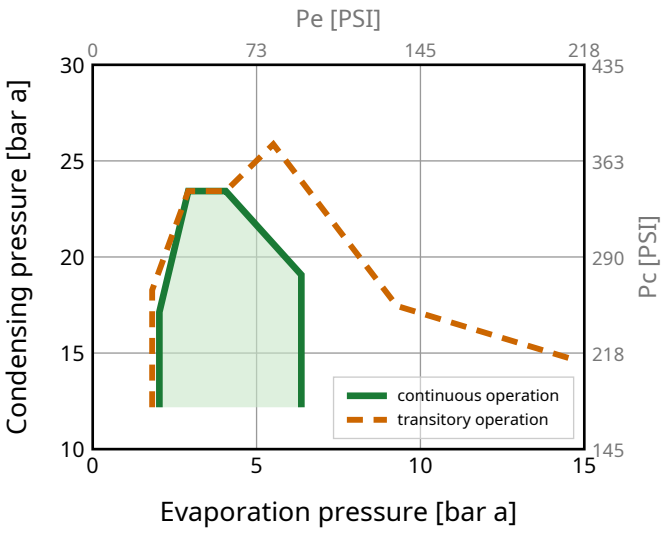

Model
NLE12.6MN Configuration 3

Sales code:
105H6377

Standard Conditions

R290, 220 V/50 Hz, eRSCR, fan 3m/s

pe	pc	RGT	Tliq	Cooling capacity			COP	EER	P	I	ṁ	
[°C] [°F]	[°C] [°F]	[°C] [°F]	[°C] [°F]	[W]	[Btu/h]	[kcal/h]	[W/W]	[Btu/Wh]	[W]	[A]	[kg/h]	
-23.3 -10	54.4 129.9	32.2 90	32.2 90	**607**	2072	522	**1.64**	5.61	370	2.21	6.17	**ASHRAE LBP**
-25 -13	55 131	32 89.6	55 131	**454**	1549	391	**1.27**	4.34	357	2.17	5.69	**CECOMAF LBP**
-35 -31	40 104	20 68	40 104	**364**	1243	313	**1.41**	4.81	258	1.83	4.18	**EN12900 LBP**
-6.7 20	54.4 129.9	35 95	46.1 115	**1070**	3652	920	**2.09**	7.12	513	2.78	12.25	**ASHRAE MBP**
-10 14	55 131	32 89.6	55 131	**850**	2899	731	**1.75**	5.97	486	2.67	10.81	**CECOMAF MBP**
-10 14	45 113	20 68	45 113	**958**	3269	824	**2.17**	7.39	442	2.49	11.79	**EN12900 MBP**

Performance Tables

R290, 220 V/50 Hz, eRSCR, fan 3m/s

pc= 45/113 | RGT= 32/89.6 | Tliq= 45/113 | °C/°F

pe		Cooling capacity			COP	EER	P	I	ṁ
[°C]	[°F]	[W]	[Btu/h]	[kcal/h]	[W/W]	[Btu/Wh]	[W]	[A]	[kg/h]
-25	-13	**539**	1840	464	**1.60**	5.46	337	2.10	6.11
-20	-4	**667**	2277	574	**1.79**	6.12	372	2.22	7.59
-15	5	**819**	2795	704	**2.01**	6.86	408	2.35	9.36
-10	14	**996**	3399	857	**2.25**	7.68	442	2.49	11.44
-5	23	**1200**	4095	1032	**2.52**	8.59	477	2.62	13.86
0	32	**1433**	4890	1232	**2.81**	9.60	509	2.76	16.66
5	41	**1696**	5787	1459	**3.14**	10.71	540	2.89	19.88
10	50	**1991**	6795	1713	**3.50**	11.95	569	3.01	23.55

pc= 55/131 | RGT= 32/89.6 | Tliq= 55/131 | °C/°F

-25	-13	**454**	1549	391	**1.27**	4.34	357	2.17	5.69
-20	-4	**565**	1929	486	**1.42**	4.85	398	2.32	7.12
-15	5	**697**	2377	599	**1.58**	5.39	441	2.49	8.81
-10	14	**850**	2899	731	**1.75**	5.97	486	2.67	10.81
-5	23	**1026**	3502	883	**1.93**	6.58	532	2.86	13.14
0	32	**1228**	4190	1056	**2.12**	7.24	579	3.06	15.84
5	41	**1456**	4970	1253	**2.33**	7.94	626	3.27	18.95
10	50	**1714**	5846	1474	**2.55**	8.69	673	3.49	22.52

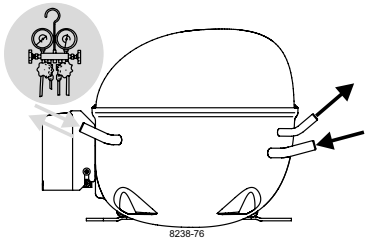

NL Compressors

SECOP

Keep electrical equipment clear from oil, chemicals, and water

When operated with a flammable refrigerant, only spark-proof starting equipment is allowed.

RSIR

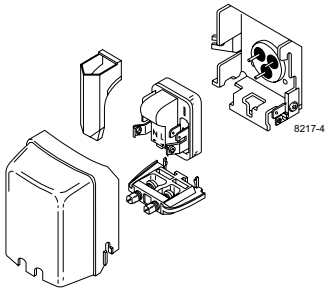

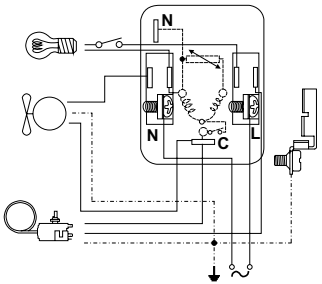

CSIR

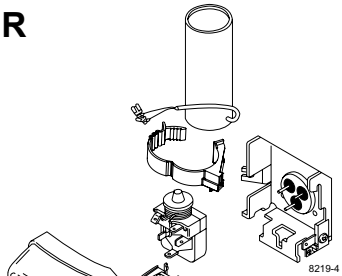

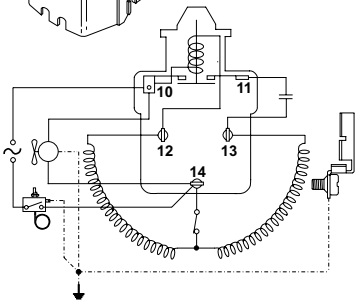

RSCR

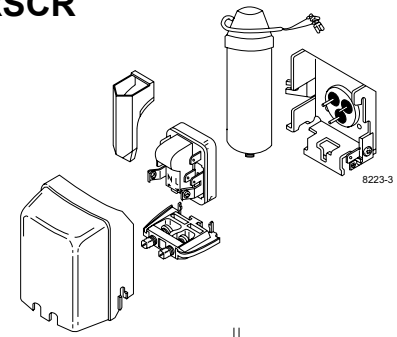

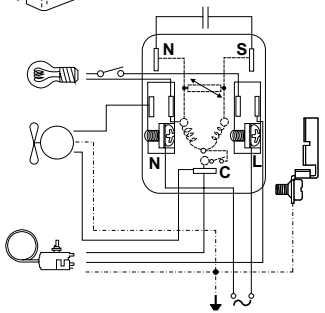

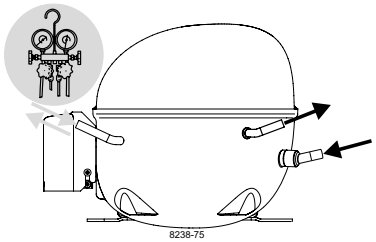

NL Compressors

SECOP

Keep electrical equipment clear from oil, chemicals, and water

When operated with a flammable refrigerant, only spark-proof starting equipment is allowed.

Service/Repair – R290, R600a, R170, R1270, R1234yf

(applies to all flammable refrigerants)



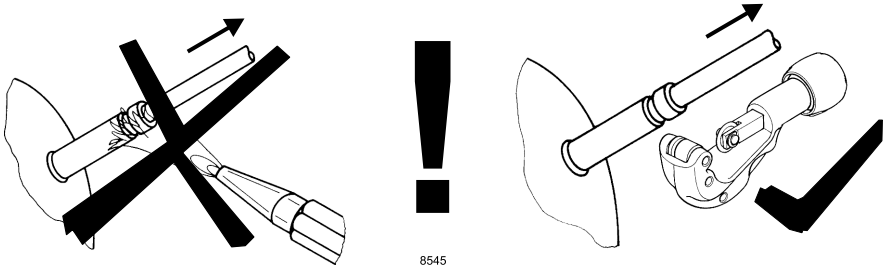

Brazing on Suction Connectors (Direct Intake)

representative image

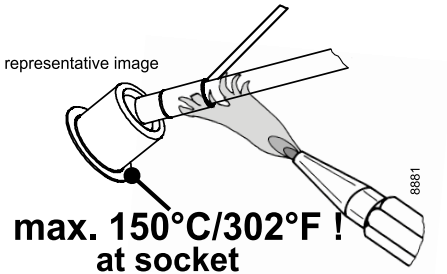

! max. 150°C/302°F ! at socket

brazing solder: phosphor (LP7) or silver

Refer to Product Bulletin:
Brazing on Suction Connectors (Compressors with Direct Suction Intake)

Dismantling, recycling, disposal: At the end of a compressor's lifecycle, proceed by separating and storing components according to their environmental impact. Parts that may cause pollution must be clearly identified and handled separately, ensuring appropriate disposal. Refrigerant gas must not be released into the environment and should be recovered by qualified operators. Compressor oil must also be collected separately. The compressor should be disposed of at specialized disposal centers in accordance with the applicable regulations. **Subject to modifications/alterations. www.secop.com**