Single
Packs

Single Pack NLE11MN 220-240V 50Hz CSIR

Single pack code number: **195B4195**

Position	Title	Code	Amount
1	Compressor NLE11MN	105H6177	1
2	Starting relay	117U7005	1
3	Starting capacitor (80µF 220V, 6.3mm)	117U5015	1
4	Cord relief	103N1010	1
5	Cover	103N2010	1
6	Bolt joint for one compressor | M6 | ø16mm	118-1917	1

Secop GmbH • Lise-Meitner-Straße 29 • 24941 Flensburg, Germany • Tel: +49 461 4941 0 • **www.secop.com**

Secop accepts no responsibility for possible errors in catalogs, brochures, and other printed material. Secop reserves the right to alter its products without notice. This also applies to products already on order provided that such alterations can be made without subsequential changes being necessary to specifications already agreed. All trademarks in this material are the property of the respective companies. Secop and the Secop logotype are trademarks of Secop GmbH. All rights reserved.

Model
NLE11MN

Sales code:
105H6177

Compressor Data

Refrigerant(s)	**R290**
Refr. charge - tech. limit	**400g / 14.11oz**
Weight	**11.80 kg / 26.01lbs**
Displacement	**11.15 cm3 / 0.68cu.in**
Compressors on pallet	**80**



General – Configurations With NLE11MN

–	Conf. 1	Conf. 2	Conf. 3
Motor configuration	CSIR	eRSIR	eRSCR
Power supply (nominal)	220-240 V/50 Hz	220-240 V/50 Hz	220-240 V/50 Hz
Number of phases	1	1	1
Voltage range	198-254 V	198-254 V	198-254 V
Approvals	CCC, EAC, VDE	CCC, EAC, VDE	CCC, EAC, VDE
Starting torque	HST	LST	LST
Refrigerant	R290	R290	R290
Application	MBP	MBP	MBP
Hot gas defrost	OK	OK	OK
Long interval pull down	OK	OK	OK

Application Notes

- Provision for PE Grounding is located at the PE Stamp on the compressor

Model
NLE11MN

Sales code:
105H6177

Compressor Design

Oil type	**POE**	Winding resistance main	**4.94 Ohm**
Oil viscosity	**32cSt**	Winding resistance aux	**8.89 Ohm**
Oil quantity	**300 / 10.14fl.oz**	Max. winding temp.	**125 °C**
Free gas volume comp.	**2,360 cm3 / 79.80fl.oz**	Max. discharge temp.	**130°C / 266°F**
Motor protection	**internal**		

Compressor Dimensions

Housing

A Height	**203mm / 7.99in**
B Height	**197mm / 7.76in**
C Length shell	**205mm / 8.07in**
D Length w. cover	**254mm / 10.00in**
E Width	**166mm / 6.54in**

Find 3D Model here

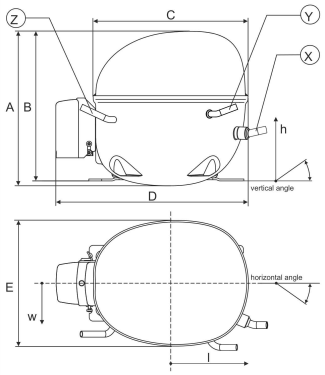

Connectors	Suction X	Discharge Y	Process Z
Diameter [mm]	øi 8.11–8.29 / 0.32–0.33in	øi 6.11–6.29 / 0.24–0.25in	øi 6.11–6.29 / 0.24–0.25in
Material	CU	CU	CU
Horizontal angle ±2°	0°	0°	0°
Vertical angle ±2°	15°	21°	155°
Position l/h/w [mm]	132/68.5/56.7 / 5.20/2.70/2.23in	94/101.7/81 / 3.70/4.00/3.19in	-109.3/94.3/72 / -4.30/3.71/2.83in
Straight tube l. [mm]	12 / 0.47in	12 / 0.47in	12 / 0.47in

Mounting Accessories

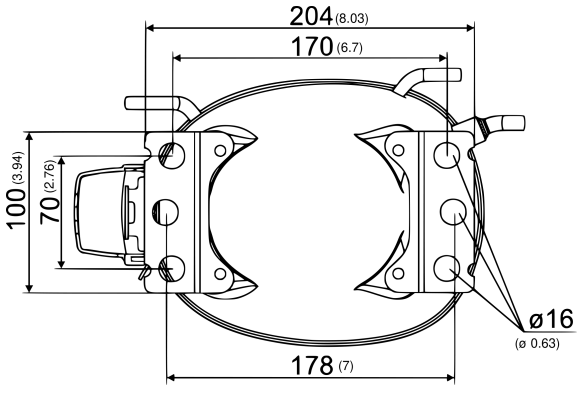

Dimensions in mm [in]

Bolt joint

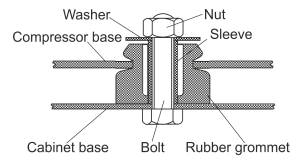

Snap-on

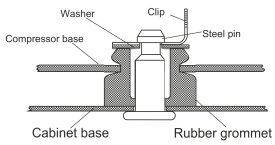

	one comp.	multi pack
Bolt joint | M6 | ø16mm	118-1917	118-1918
Bolt joint | ø1/4" | ø16mm	118-1946	–
Snap-on | ø7,3 | ø16mm	118-1947	118-1919

Model
NLE11MN Configuration 1

Sales code:
105H6177

Configuration

Motor configuration	**CSIR**
Power supply (nominal)	**220-240 V/50 Hz 1~**
Refrigerant	**R290**
Application	**MBP**
Voltage range	**198-254 V**
Starting torque	**HST**
Approvals	**CCC, EAC, VDE**
Starting device type	**relay**
Run capacitor	**-/-**
Start capacitor	**80 µF**
LRA (locked rotor amps / 4s/ U(N))	**13.65 A**
RLA (rated load amps / 1s/ U(N))	**2.8 A**
Cut in current (U(N))	**13.65 A**

Ambient/ machine room temperatures minimum /maximum
Ambient temperature range: 10 - 43°C / 50 - 109°F
Machine room temp. compressor: 10 - 48°C / 50 - 118°F

System Cooling
fan 3m/s

Electrical Accessories / Wiring Diagram

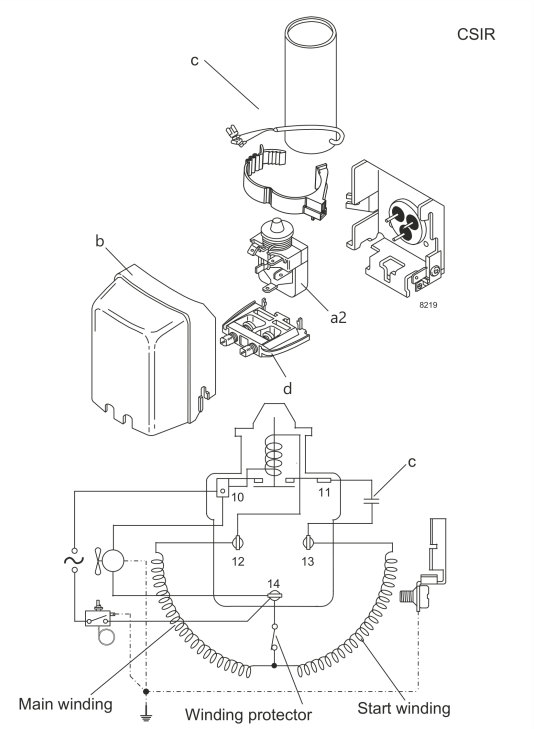

View full size

Components
a2 relay 117U7005
c start capacitor (80µF) 117U5015
b plastic cover 103N2010
d cord relief 103N1010

Alternative components
b plastic cover 103N2011

Operation Pressure Range

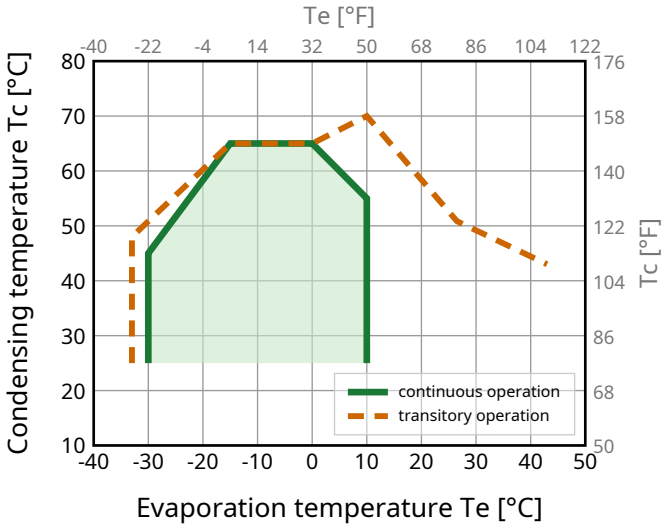

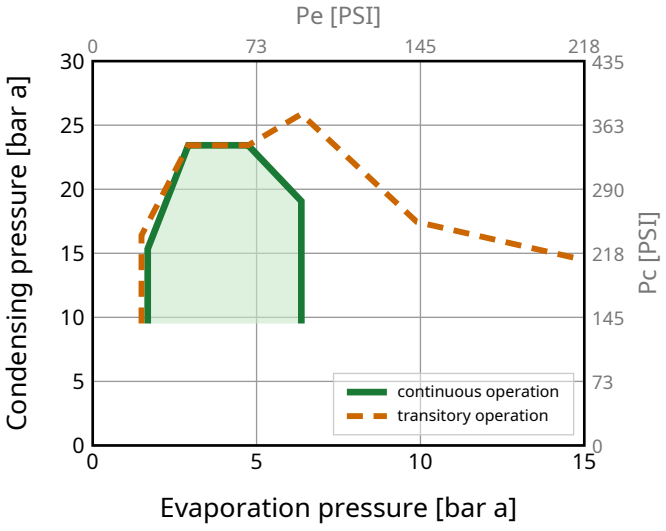

Model Sales code:

NLE11MN Configuration 1 **105H6177**

Standard Conditions

R290, 220 V/50 Hz, CSIR, fan 3m/s

pe	pc	RGT	Tliq	Cooling capacity			COP	EER	P	I	ṁ	
[°C] [°F]	[°C] [°F]	[°C] [°F]	[°C] [°F]	[W]	[Btu/h]	[kcal/h]	[W/W]	[Btu/Wh]	[W]	[A]	[kg/h]	
-6.7 20	54.4 129.9	35 95	46.1 115	**982**	3349	844	**2.01**	6.87	488	2.86	11.24	**ASHRAE MBP**
-10 14	55 131	32 89.6	55 131	**782**	2667	672	**1.69**	5.75	464	2.76	9.94	**CECOMAF MBP**
-10 14	45 113	20 68	45 113	**871**	2970	749	**2.06**	7.03	422	2.63	10.71	**EN12900 MBP**
-6.7 20	48.8 119.8	18.3 64.9	48.8 119.8	**924**	3154	795	**2.01**	6.84	461	2.77	12.02	**ARI540 MBP**
-10 14	45 113	32 89.6	45 113	**905**	3088	778	**2.14**	7.31	422	2.63	10.39	**opt MBP 1**
-25 -13	45 113	32 89.6	45 113	**489**	1669	421	**1.51**	5.15	325	2.29	5.55	**opt MBP 2**

Performance Tables

R290, 220 V/50 Hz, CSIR, fan 3m/s

pc= 45/113 | RGT= 32/89.6 | Tliq= 45/113 | °C/°F

pe		Cooling capacity			COP	EER	P	I	ṁ
[°C]	[°F]	[W]	[Btu/h]	[kcal/h]	[W/W]	[Btu/Wh]	[W]	[A]	[kg/h]
-30	-22	**390**	1331	336	**1.33**	4.55	292	2.20	4.41
-20	-4	**607**	2072	522	**1.70**	5.80	358	2.39	6.91
-10	14	**905**	3088	778	**2.14**	7.31	422	2.63	10.39
0	32	**1291**	4406	1110	**2.69**	9.18	480	2.85	15.01
10	50	**1774**	6052	1525	**3.40**	11.59	522	2.98	20.98

pc= 55/131 | RGT= 32/89.6 | Tliq= 55/131 | °C/°F

-30	-22	**340**	1158	292	**1.12**	3.81	304	2.23	4.24
-20	-4	**524**	1788	451	**1.37**	4.68	382	2.46	6.59
-10	14	**782**	2667	672	**1.69**	5.75	464	2.76	9.94
0	32	**1121**	3823	964	**2.07**	7.06	541	3.08	14.45
10	50	**1549**	5285	1332	**2.55**	8.70	607	3.34	20.35

Model
NLE11MN Configuration 2

Sales code:
105H6177

Configuration

Motor configuration	**eRSIR**
Power supply (nominal)	**220-240 V/50 Hz 1~**
Refrigerant	**R290**
Application	**MBP**
Voltage range	**198-254 V**
Starting torque	**LST**
Approvals	**CCC, EAC, VDE**
Starting device type	**e-PTC**
Run capacitor	**-/-**
Start capacitor	**-/-**
LRA (locked rotor amps / 4s/ U(N))	**13.65 A**
RLA (rated load amps / 1s/ U(N))	**2.8 A**
Cut in current (U(N))	**13.65 A**

Ambient/ machine room temperatures minimum /maximum
Ambient temperature range: 10 - 43°C / 50 - 109°F
Machine room temp. compressor: 10 - 48°C / 50 - 118°F

System Cooling
fan 3m/s

Electrical Accessories / Wiring Diagram

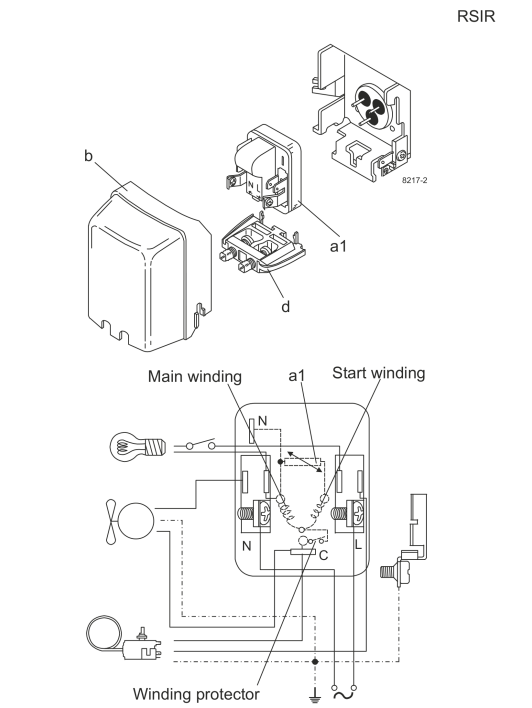

Components
a1 e-PTC starter (220V, 25Ohm, 4.8mm) 103N0050
b plastic cover 103N2010
d cord relief 103N1010

Alternative components
b plastic cover 103N2011

Operation Pressure Range

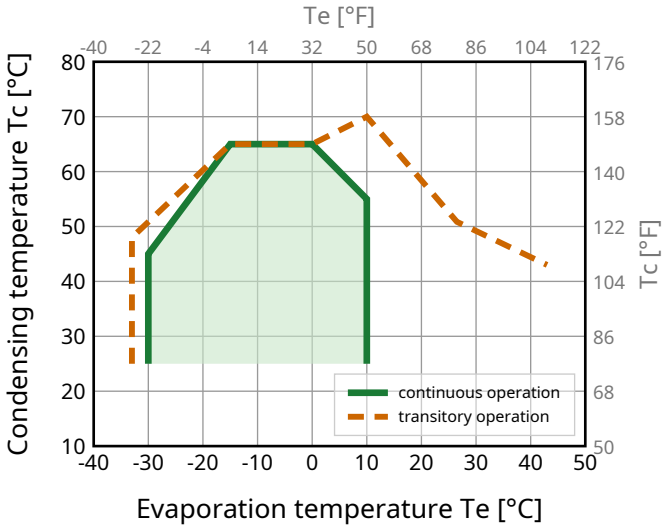

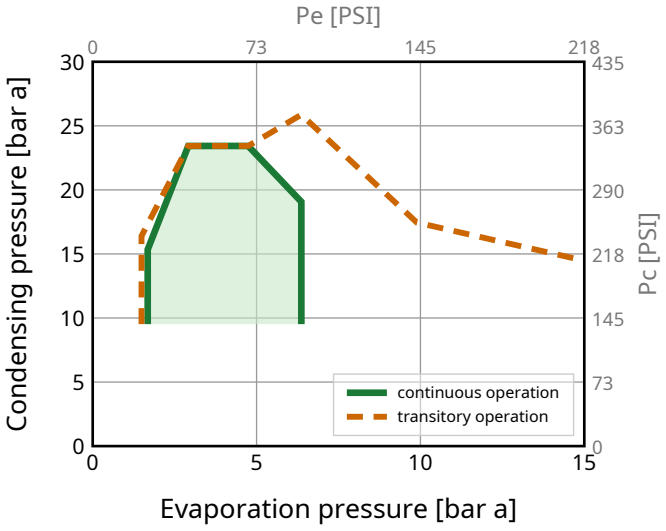

Model
NLE11MN Configuration 2

Sales code:
105H6177

Standard Conditions

R290, 220 V/50 Hz, eRSIR, fan 3m/s

pe	pc	RGT	Tliq	Cooling capacity			COP	EER	P	I	ṁ	
[°C] [°F]	[°C] [°F]	[°C] [°F]	[°C] [°F]	[W]	[Btu/h]	[kcal/h]	[W/W]	[Btu/Wh]	[W]	[A]	[kg/h]	
-6.7 20	54.4 129.9	35 95	46.1 115	**982**	3349	844	**2.01**	6.87	488	2.86	11.24	**ASHRAE MBP**
-10 14	55 131	32 89.6	55 131	**782**	2667	672	**1.69**	5.75	464	2.76	9.94	**CECOMAF MBP**
-10 14	45 113	20 68	45 113	**871**	2970	749	**2.06**	7.03	422	2.63	10.71	**EN12900 MBP**
-6.7 20	48.8 119.8	18.3 64.9	48.8 119.8	**924**	3154	795	**2.01**	6.84	461	2.77	12.02	**ARI540 MBP**
-10 14	45 113	32 89.6	45 113	**905**	3088	778	**2.14**	7.31	422	2.63	10.39	**opt MBP 1**
-25 -13	45 113	32 89.6	45 113	**489**	1669	421	**1.51**	5.15	325	2.29	5.55	**opt MBP 2**

Performance Tables

R290, 220 V/50 Hz, eRSIR, fan 3m/s

pc= 45/113 | RGT= 32/89.6 | Tliq= 45/113 | °C/°F

pe		Cooling capacity			COP	EER	P	I	ṁ
[°C]	[°F]	[W]	[Btu/h]	[kcal/h]	[W/W]	[Btu/Wh]	[W]	[A]	[kg/h]
-30	-22	**390**	1331	336	**1.33**	4.55	292	2.20	4.41
-20	-4	**607**	2072	522	**1.70**	5.80	358	2.39	6.91
-10	14	**905**	3088	778	**2.14**	7.31	422	2.63	10.39
0	32	**1291**	4406	1110	**2.69**	9.18	480	2.85	15.01
10	50	**1774**	6052	1525	**3.40**	11.59	522	2.98	20.98

pc= 55/131 | RGT= 32/89.6 | Tliq= 55/131 | °C/°F

-30	-22	**340**	1158	292	**1.12**	3.81	304	2.23	4.24
-20	-4	**524**	1788	451	**1.37**	4.68	382	2.46	6.59
-10	14	**782**	2667	672	**1.69**	5.75	464	2.76	9.94
0	32	**1121**	3823	964	**2.07**	7.06	541	3.08	14.45
10	50	**1549**	5285	1332	**2.55**	8.70	607	3.34	20.35

Model
NLE11MN Configuration 3

Sales code:
105H6177

Configuration

Motor configuration	**eRSCR**
Power supply (nominal)	**220-240 V/50 Hz 1~**
Refrigerant	**R290**
Application	**MBP**
Voltage range	**198-254 V**
Starting torque	**LST**
Approvals	**CCC, EAC, VDE**
Starting device type	**e-PTC**
Run capacitor	**4 µF**
Start capacitor	**-/-**
LRA (locked rotor amps / 4s/ U(N))	**13.65 A**
RLA (rated load amps / 1s/ U(N))	**2.8 A**
Cut in current (U(N))	**13.65 A**

Ambient/ machine room temperatures minimum /maximum
Ambient temperature range: 10 - 43°C / 50 - 109°F
Machine room temp. compressor: 10 - 48°C / 50 - 118°F

System Cooling
fan 3m/s

Electrical Accessories / Wiring Diagram

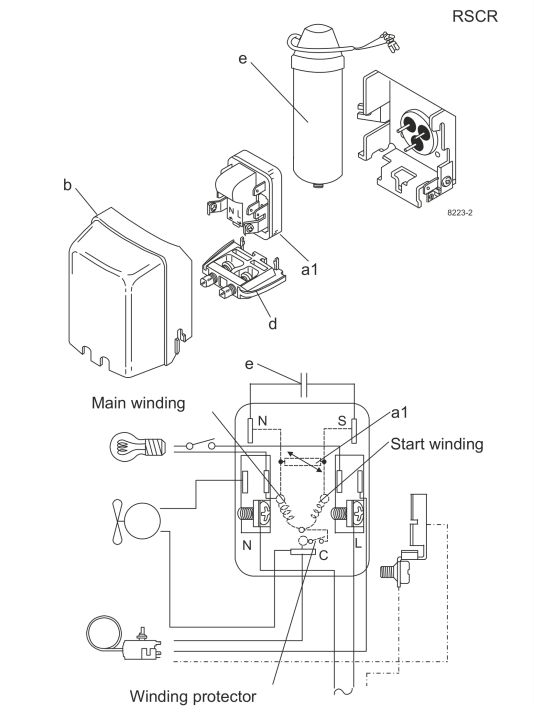

Components
a1 e-PTC starter (220V, 25Ohm, 4.8mm) 103N0050
e run capacitor (4µF, 4.8mm) 117-7119
b plastic cover 103N2010
d cord relief 103N1010
bracket for run capacitor 117-0300
screw M4x8mm 117-0301

Alternative components
b plastic cover 103N2011

Operation Pressure Range

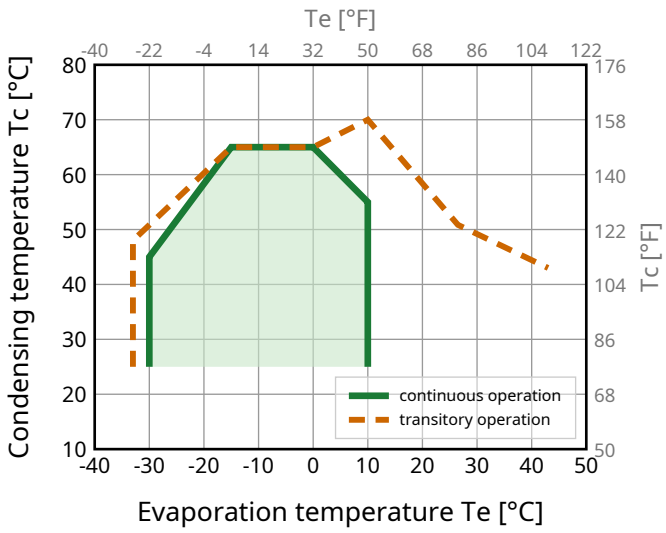

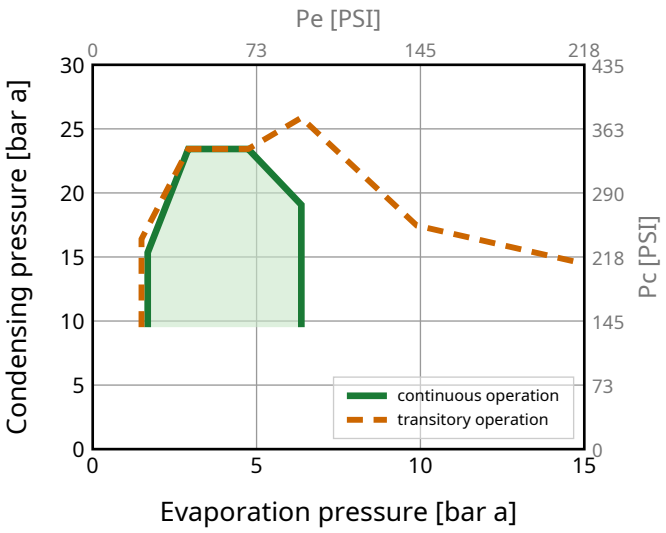

Model
NLE11MN Configuration 3

Sales code:
105H6177

Standard Conditions

R290, 220 V/50 Hz, eRSCR, fan 3m/s

pe	pc	RGT	Tliq	Cooling capacity			COP	EER	P	I	ṁ	
[°C] [°F]	[°C] [°F]	[°C] [°F]	[°C] [°F]	[W]	[Btu/h]	[kcal/h]	[W/W]	[Btu/Wh]	[W]	[A]	[kg/h]	
-6.7 20	54.4 129.9	35 95	46.1 115	**986**	3365	848	**2.11**	7.21	467	2.74	11.29	**ASHRAE MBP**
-10 14	55 131	32 89.6	55 131	**785**	2678	675	**1.77**	6.03	444	2.64	9.98	**CECOMAF MBP**
-10 14	45 113	20 68	45 113	**874**	2983	752	**2.16**	7.37	405	2.52	10.76	**EN12900 MBP**
-6.7 20	48.8 119.8	18.3 64.9	48.8 119.8	**929**	3168	799	**2.10**	7.18	441	2.65	12.07	**ARI540 MBP**
-10 14	45 113	32 89.6	45 113	**909**	3102	782	**2.25**	7.66	405	2.52	10.44	**opt MBP 1**
-25 -13	45 113	32 89.6	45 113	**491**	1675	422	**1.58**	5.40	310	2.18	5.57	**opt MBP 2**

Performance Tables

R290, 220 V/50 Hz, eRSCR, fan 3m/s

pc= 45/113 | RGT= 32/89.6 | Tliq= 45/113 | °C/°F

pe		Cooling capacity			COP	EER	P	I	ṁ
[°C]	[°F]	[W]	[Btu/h]	[kcal/h]	[W/W]	[Btu/Wh]	[W]	[A]	[kg/h]
-30	-22	**391**	1335	337	**1.40**	4.79	279	2.10	4.42
-20	-4	**610**	2080	524	**1.78**	6.08	342	2.29	6.94
-10	14	**909**	3102	782	**2.25**	7.66	405	2.52	10.44
0	32	**1299**	4433	1117	**2.83**	9.65	459	2.73	15.11
10	50	**1790**	6108	1539	**3.60**	12.28	498	2.84	21.17

pc= 55/131 | RGT= 32/89.6 | Tliq= 55/131 | °C/°F

-30	-22	**341**	1162	293	**1.18**	4.01	290	2.12	4.25
-20	-4	**526**	1794	452	**1.44**	4.91	366	2.35	6.62
-10	14	**785**	2678	675	**1.77**	6.03	444	2.64	9.98
0	32	**1127**	3846	969	**2.18**	7.42	518	2.94	14.54
10	50	**1563**	5334	1344	**2.70**	9.22	579	3.18	20.54

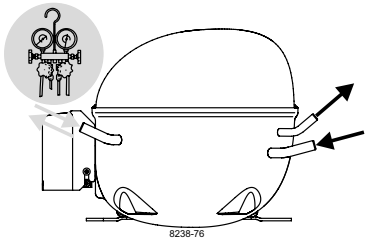

NL Compressors

SECOP

Keep electrical equipment clear from oil, chemicals, and water

When operated with a flammable refrigerant, only spark-proof starting equipment is allowed.

RSIR

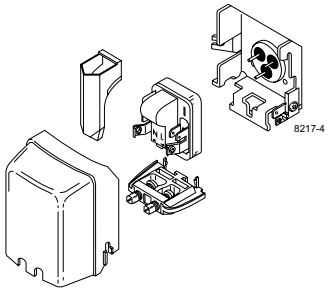

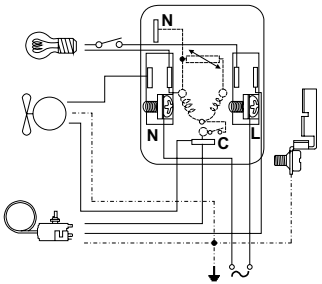

CSIR

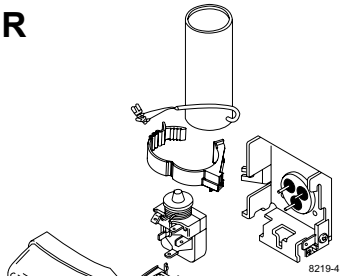

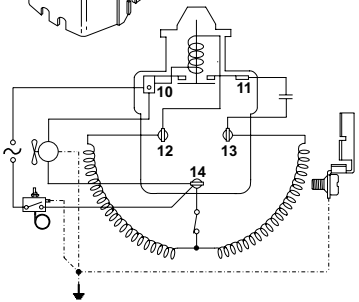

RSCR

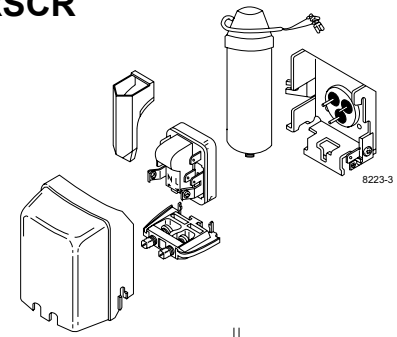

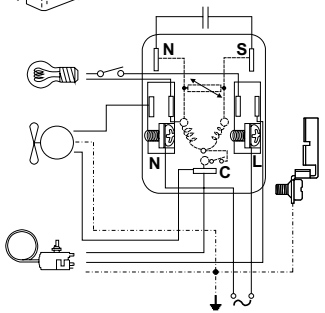

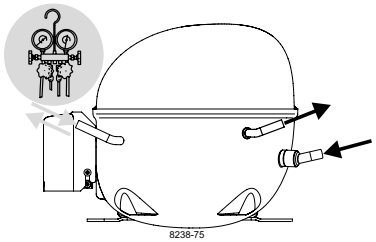

NL Compressors

SECOP

Keep electrical equipment clear from oil, chemicals, and water

When operated with a flammable refrigerant, only spark-proof starting equipment is allowed.

Service/Repair – R290, R600a, R170, R1270, R1234yf

(applies to all flammable refrigerants)



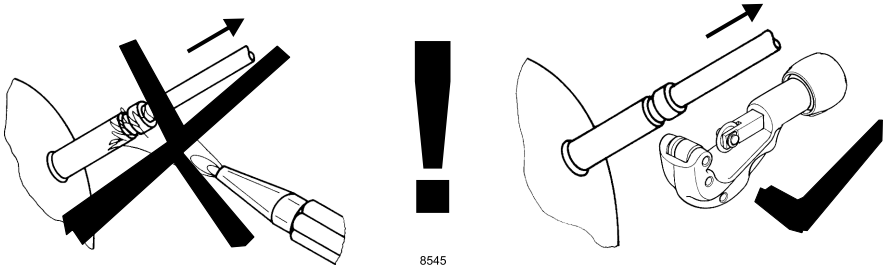

Brazing on Suction Connectors (Direct Intake)

representative image

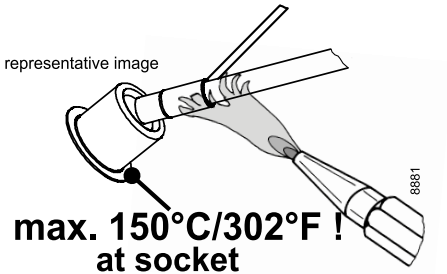

! max. 150°C/302°F ! at socket

brazing solder: phosphor (LP7) or silver

Refer to Product Bulletin:
Brazing on Suction Connectors (Compressors with Direct Suction Intake)

Dismantling, recycling, disposal: At the end of a compressor's lifecycle, proceed by separating and storing components according to their environmental impact. Parts that may cause pollution must be clearly identified and handled separately, ensuring appropriate disposal. Refrigerant gas must not be released into the environment and should be recovered by qualified operators. Compressor oil must also be collected separately. The compressor should be disposed of at specialized disposal centers in accordance with the applicable regulations. **Subject to modifications/alterations. www.secop.com**