Technical Data Sheet

Compressor model **ML80TB**

Voltage **220-240V 50Hz ~1**

Refrigerant **R404A**

Compressor status

APPLICATION

Application	High-Medium Back Pressure
Refrigerant	R404A
Evaporating Temp.	-25,0 ºC to 10,0 ºC
Expansion	Capillar/Valve
Comp. Cooling	Fan cooled
Max. ambient temp.	43,0 ºC

COMPRESSOR

Displacement	7,57 cm³
Diameter	25,40 mm
Stroke	14,92 mm
Net Weight	9,68 Kg
Oil type	ISO VG 32 ESTER
Oil charge	395 cm³
HP	3/8 hp

MOTOR

Voltage/Frequency	220-240V 50Hz
Voltage range	198-255 V
Type	CSIR
Phase number	1 PH
Locked Rotor Amps (LRA)	12,80 A
Max. Cont. Current (MCC)	5,10 A
Main W. resist. at 25ºC	7,75 Ω
Start W. resist. at 25ºC	21,43 Ω

NOMINAL PERFORMANCE

	ASHRAE	CECOMAF
Cooling Capacity	950 kCal/h	875 W
COP	1,99 W/W	1,61 W/W
EER	1,71 kCal/Wh	1,39 kCal/Wh
Input Power	555 W	543 W
Current	3,10 A	3,05 A

APPROVALS

TEST CYCLE CONDITIONS

	ASHRAE HMBP (D)	**CECOMAF HMBP (C)**
Evaporating temp. (T_e)	7,2 ºC	5,0 ºC
Condensing temp. (T_c)	55,0 ºC	55,0 ºC
Liquid temp. ($T_{liq.}$)	46,0 ºC	55,0 ºC
Ambient temp. ($T_{amb.}$)	35,0 ºC	32,0 ºC
Suction temp. ($T_{suction}$)	35,0 ºC	32,0 ºC
Voltage/Frequency	220 V 50 Hz	220 V 50 Hz

ELECTRICAL COMPONENTS

Starting capacitor	47- 56 µF 330 V			
Relay	Option 1	Option 2		
Reference	2014 138.	QLZ-6.1A		
Pick-Up	6,10 A	6.1 A		
Drop-Out	5,20 A	5.2 A		
Protector	Option 1	Option 2		
Reference	MST26AMK	T0181		
Current	11,10 A	11,10 A		
Time check	7,5-14 seg	7,5-14 seg		
Disc temp. (Open/Close)	105,00 / 61,00 ºC	105,00 / 61,00 ºC		

Technical Data Sheet

cubigel compressors

ASHRAE

Tc °C	Te °C	Cooling Capacity kCal/h	Consumption W	Current A	COP W/W	EER kCal/Wh
40	-25	315	284	2,08	1,29	1,11
40	-20	419	316	2,18	1,55	1,33
40	-15	538	346	2,28	1,81	1,56
40	-10	673	375	2,38	2,09	1,79
40	-5	822	403	2,49	2,38	2,04
40	0	987	429	2,58	2,67	2,30
40	5	1.166	454	2,68	2,99	2,57
40	7,2	1.250	465	2,72	3,13	2,69
40	10	1.361	478	2,78	3,31	2,85
45	-25	285	286	2,09	1,16	1,00
45	-20	378	322	2,20	1,37	1,18
45	-15	487	357	2,32	1,59	1,37
45	-10	610	390	2,44	1,82	1,57
45	-5	749	422	2,56	2,06	1,77
45	0	902	453	2,68	2,32	1,99
45	5	1.071	482	2,79	2,58	2,22
45	7,2	1.150	495	2,85	2,70	2,32
45	10	1.255	511	2,91	2,86	2,46
50	-25	255	288	2,09	1,03	0,89
50	-20	337	328	2,22	1,20	1,03
50	-15	435	367	2,36	1,38	1,18
50	-10	548	405	2,49	1,57	1,35
50	-5	675	441	2,63	1,78	1,53
50	0	818	477	2,77	2,00	1,72
50	5	976	510	2,91	2,22	1,91
50	7,2	1.050	525	2,97	2,33	2,00
50	10	1.149	543	3,05	2,46	2,11
55	-25	225	290	2,10	0,90	0,78
55	-20	297	335	2,25	1,03	0,89
55	-15	383	378	2,40	1,18	1,01
55	-10	485	420	2,55	1,34	1,15
55	-5	602	461	2,71	1,52	1,31
55	0	734	500	2,87	1,71	1,47
55	5	881	539	3,03	1,90	1,64
55	7,2	950	555	3,10	1,99	1,71
55	10	1.043	576	3,19	2,11	1,81
60	-25	195	292	2,11	0,78	0,67
60	-20	256	341	2,27	0,87	0,75
60	-15	332	389	2,43	0,99	0,85
60	-10	422	435	2,61	1,13	0,97
60	-5	528	480	2,78	1,28	1,10
60	0	649	524	2,97	1,44	1,24
60	5	785	567	3,15	1,61	1,39
60	7,2	850	585	3,23	1,69	1,45
60	10	936	608	3,34	1,79	1,54

CECOMAF

Tc °C	Te °C	Cooling Capacity W	Consumption W	Current A	COP W/W	EER kCal/Wh
40	-25	330	286	2,09	1,16	1,00
40	-20	442	317	2,19	1,39	1,20
40	-15	568	348	2,29	1,63	1,41
40	-10	709	377	2,39	1,88	1,62
40	-5	864	405	2,49	2,13	1,84
40	0	1.034	432	2,60	2,39	2,07
40	5	1.219	458	2,70	2,66	2,30
40	7,2	1.305	469	2,74	2,79	2,41
40	10	1.418	482	2,79	2,94	2,54
45	-25	295	288	2,09	1,03	0,89
45	-20	393	324	2,21	1,22	1,05
45	-15	506	359	2,33	1,41	1,22
45	-10	634	392	2,45	1,62	1,40
45	-5	776	425	2,57	1,83	1,58
45	0	933	456	2,69	2,05	1,77
45	5	1.104	486	2,81	2,27	1,96
45	7,2	1.184	499	2,86	2,37	2,05
45	10	1.290	515	2,93	2,51	2,17
50	-25	260	290	2,10	0,90	0,78
50	-20	345	330	2,23	1,05	0,90
50	-15	445	369	2,37	1,20	1,04
50	-10	559	407	2,50	1,37	1,19
50	-5	688	444	2,64	1,55	1,34
50	0	832	480	2,78	1,73	1,50
50	5	990	514	2,93	1,92	1,66
50	7,2	1.064	529	2,99	2,01	1,74
50	10	1.162	547	3,07	2,12	1,83
55	-25	225	292	2,11	0,77	0,67
55	-20	297	337	2,25	0,88	0,76
55	-15	383	380	2,40	1,01	0,87
55	-10	484	423	2,56	1,15	0,99
55	-5	600	464	2,72	1,29	1,12
55	0	730	504	2,88	1,45	1,25
55	5	875	543	3,05	1,61	1,39
55	7,2	943	559	3,12	1,69	1,46
55	10	1.034	580	3,21	1,78	1,54
60	-25	191	294	2,11	0,65	0,56
60	-20	249	343	2,27	0,73	0,63
60	-15	322	391	2,44	0,82	0,71
60	-10	410	438	2,62	0,94	0,81
60	-5	512	483	2,80	1,06	0,91
60	0	629	528	2,98	1,19	1,03
60	5	760	571	3,17	1,33	1,15
60	7,2	822	589	3,25	1,40	1,21
60	10	906	613	3,36	1,48	1,28

EN12900

X	Cooling Capacity (W)	Consumption (W)	Current (A)	Mass Flow (kg/h)
1	1.844,1654358994	247,3131646163	1,7676603846	37,209712793919
2	56,6828614829	-1,6368084797	-0,0090061356	1,3076743535973
3	-20,9375463317	4,9473767289	0,0214144559	-0,21299060786709
4	0,2764332705	-0,0196399069	0,0000996566	0,012975409746254
5	-0,5568819630	0,1814199387	0,0008040005	-0,0046865142132231

Equation	$x_1 + x_2Te + x_3Tc + x_4Te^2 + x_5TeTc$

COMPRESSOR DIMENSIONS

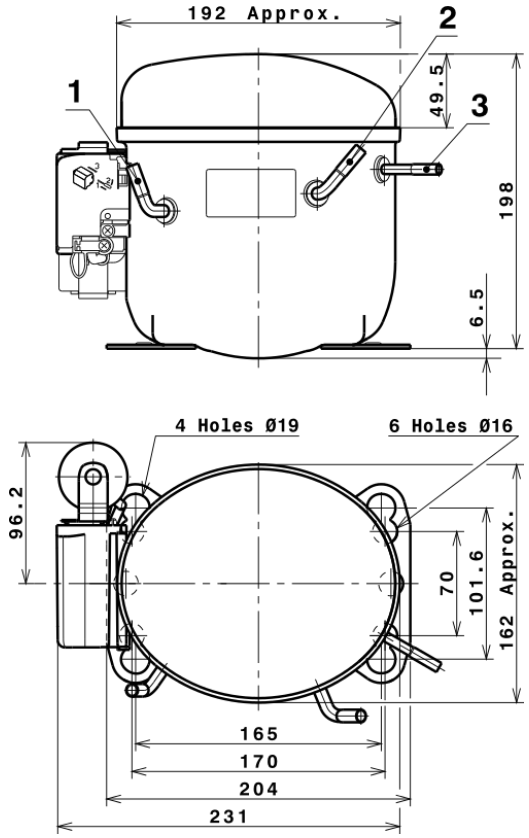

	DESIGNATION	INTERNAL DIAM.
1	Suction	6,5 mm
2	Service	6,5 mm
3	Discharge	4,9 mm

WIRING DIAGRAMS AND ELECTRICAL ASSEMBLY

CSIR CONNECTION (L, P ranges)

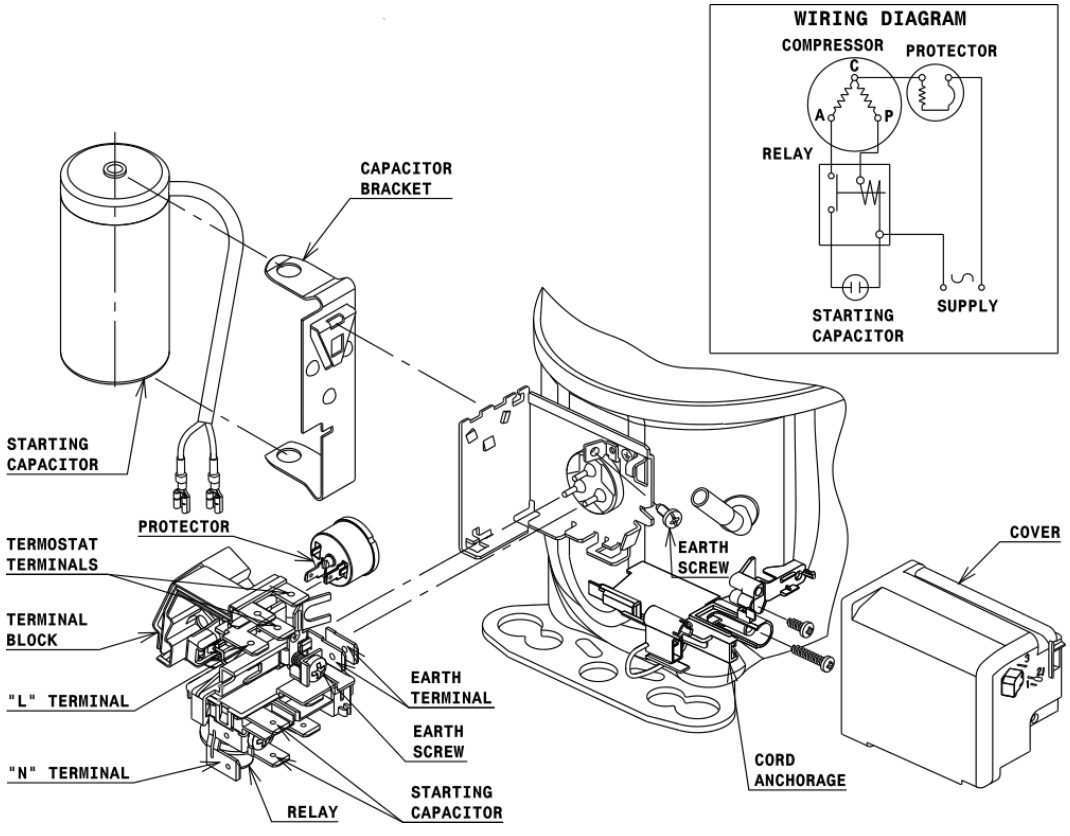

FIXINGS

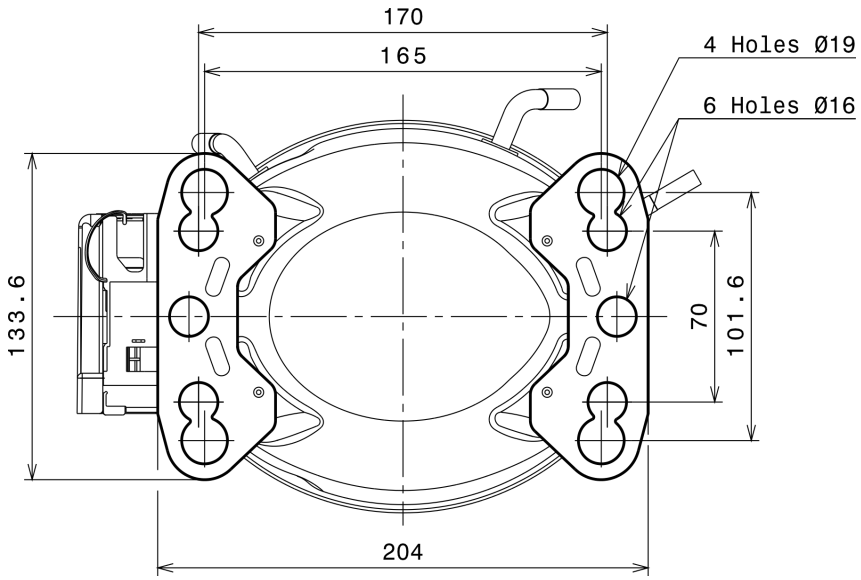

SILENT BLOCKS (MOUNTING ACCESSORIES)

STANDARD

Ø16 holes (170x70 net)

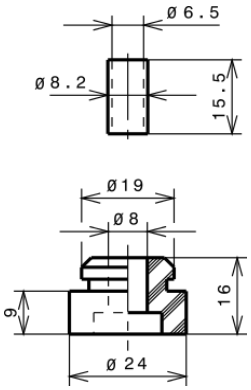

AMERICAN FEET

Ø19 holes (165x101.6 net)

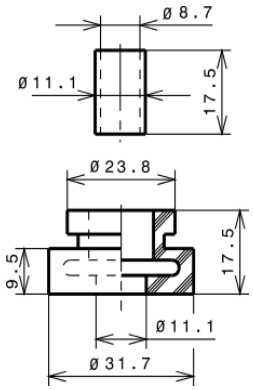

SNAP-ON

Ø16 holes (170x70 net)

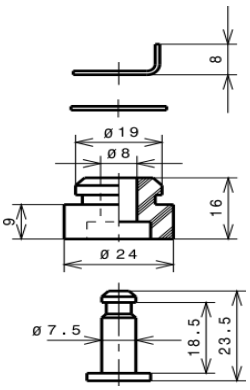

SOA

SOA R404A HMBP

