APPLICATION GUIDELINES

Copeland ZX Small Outdoor refrigeration units

ZXME-013E to ZXME-018E
ZXLE-018E to ZXLE-028E



COPELAND

Table of contents

About these guidelines 1
1 Safety instructions 1
1.1 Icon explanation 1
1.2 Safety statements 1
1.3 General instructions 2
2 Product description 3
2.1 General information about Copeland ZX Small outdoor refrigeration units 3
2.2 EU Ecodesign Directive 2009/125/EC 3
2.3 Main product features & dimensions 3
2.4 Product nameplate 4
2.5 Nomenclature 5
2.6 Application range 5
2.6.1 Qualified refrigerants and oils 5
2.6.2 Application limits 5
2.7 BOM variations 5
2.8 P&I Diagrams 6
2.8.1 ZXME Small units 6
2.8.2 ZXLE Small units 7
2.9 Main components description 8
2.9.1 Compressor 8
2.9.2 Condenser fan 8
2.9.3 Housing 8
2.10 Main control & safety features 9
2.10.1 Suction pressure control 9
2.10.2 Motor current overload protection 9
2.10.3 Fixed high-pressure switch PS4 9
2.10.4 Adjustable low-pressure switch PS1 9
2.10.5 Fan speed controller 9
2.10.6 Crankcase heater 9
2.10.7 Liquid line assembly 9
2.10.8 Room thermostat 9
3 Installation 10
3.1 Refrigeration unit handling 10
3.1.1 Transport and storage 10

3.1.2 Weights 10
3.2 Refrigeration piping connections 11
3.2.1 Refrigeration piping installation 11
3.2.2 Brazing recommendations 12
3.2.3 Brazing procedure 12
3.3 Electrical connection 13
3.3.1 Power supply connections 13
3.3.2 Maximum operating currents for cable selection 14
3.3.3 Electrical protection standard (protection class) 14
3.3.4 Main fuses 14
3.3.5 Time relay on ZXLE units 14
3.4 Location & fixings 15
4 Start-up & operation 16
4.1 Evacuation 16
4.2 Charging procedure 16
4.2.1 Refrigerant charging procedure 16
4.2.2 Oil charging procedure 17
4.3 Rotation direction of scroll compressors 17
4.4 Maximum compressor cycle 17
4.5 Checks before starting & during operation 18
4.6 Restart after unexpected stop 18
5 Maintenance & repair 19
5.1 Replacing a compressor 19
5.2 Safety devices 19
5.3 Condenser fins 19
5.4 Electrical connections 20
5.5 Routine leak testing 20
5.6 Condenser fan & motor 20
6 Certification & approval 21
7 Dismantling & disposal 21
Appendix 1: Wiring diagrams – ZX Small units (220-240 V / 1 Ph / 50 Hz) 22
Appendix 2: List of tables and figures 24

About these guidelines

The purpose of these application guidelines is to provide guidance in the application of Copeland ZX Small outdoor refrigeration units. They are intended to answer the questions raised while designing, assembling and operating a system with these products.

Besides the support they provide, the instructions listed herein are also critical for the proper and safe functioning of the refrigeration units. The performance and reliability of the product may be impacted if it is not used according to these guidelines or is misused.

These application guidelines cover stationary applications only. For mobile applications, contact Application Engineering as other considerations may apply.

1 Safety instructions

Copeland refrigeration units are manufactured according to the latest European safety standards. Particular emphasis has been placed on the user's safety.

The ZX Small refrigeration units are intended for installation in machines and systems in accordance with the following directives and regulations:

Machinery Directive MD 2006/42/EC	Supply of Machinery (Safety) Regulations 2008
Pressure Equipment Directive PED 2014/68/EU	Pressure Equipment (Safety) Regulations 2016
Low Voltage Directive LVD 2014/35/EU	Electrical Equipment (Safety) Regulations 2016
Electromagnetic Compatibility Directive EMC 2014/30/EU	Electromagnetic Compatibility Regulations 2016
Ecodesign Directive 2009/125/EC	Ecodesign for Energy-Related Products Regulations 2010

They may be put to service only if they have been installed in these systems according to instructions and conform to the corresponding provisions of legislation. For relevant standards please refer to the Manufacturer's Declaration, available at www.copeland.com/en-gb.

These instructions should be retained throughout the lifetime of both the compressor and the refrigeration unit.

You are strongly advised to follow these safety instructions.

1.1 Icon explanation

	**WARNING** This icon indicates instructions to avoid personal injury and material damage.		**CAUTION** This icon indicates instructions to avoid property damage and possible personal injury.
	**High voltage** This icon indicates operations with a danger of electric shock.		**IMPORTANT** This icon indicates instructions to avoid malfunction of the compressor.
	**Danger of burning or frostbite** This icon indicates operations with a danger of burning or frostbite.	***NOTE***	This word indicates a recommendation for easier operation.
	**Explosion hazard** This icon indicates operations with a danger of explosion.		

1.2 Safety statements

- **Refrigerant compressors and refrigeration units must be employed only for their intended use. The system has to be labelled according to the applicable standards and legislation.**
- **Only qualified and authorized HVACR personnel are permitted to install, commission and maintain this equipment.**
- **Electrical connections must be made by qualified electrical personnel.**
- **All valid standards for connecting electrical and refrigeration equipment must be observed.**
- **The national legislation and regulations regarding personnel protection must be observed.**



Use personal safety equipment. Safety goggles, gloves, protective clothing, safety boots and hard hats should be worn where necessary.

1.3 General instructions



WARNING
Pressurized system! Serious personal injuries and/or system breakdown! Accidental system start before complete set-up must be avoided. Never install a system in the field and leave it unattended when it has no charge, when it has a holding charge, or with the service valves closed, without locking out the system electrically.



WARNING
System breakdown! Personal injuries! Only approved refrigerants and refrigeration oils must be used.



WARNING
High surface temperature! Burning! Do not touch the compressor or piping until they have cooled down. Ensure that other materials in the area of the compressor do not come into contact with it. Mark and secure accessible sections.



CAUTION
Overheating! Bearing damage! Do not operate compressors without refrigerant charge or without being connected to the system.



CAUTION
Contact with POE! Material damage! POE lubricants must be handled carefully and the proper protective equipment (gloves, eye protection, etc.) must be used at all times. POE must not come into contact with any surface or material that it might damage, including without limitation, certain polymers, eg, PVC/CPVC and polycarbonate.



IMPORTANT
Transit damage! Unit malfunction! Use original packaging. Avoid collisions and tilting.



IMPORTANT
This appliance is not designed to be accessible to the general public according to IEC 60335-2-40.

The contractor is responsible for the installation of the unit and should check the following points:

- sufficient liquid sub-cooling in the line to the expansion valve(s) to avoid "flash-gas" in the liquid line;
- sufficient amount of oil in the compressor (in case of long piping additional oil must be charged).

2 Product description

2.1 General information about Copeland ZX Small outdoor refrigeration units

Copeland has developed the ZX Small outdoor refrigeration unit to meet primarily the needs of the food retail and food service sectors. It is a refrigeration air-cooled condensing unit that uses the latest Copeland patented scroll technology. The combination of a large condenser and a low speed fan allows for particularly quiet operation.



2.2 EU Ecodesign Directive 2009/125/EC

The European Directive 2009/125/EC with regard to Ecodesign requirements for professional refrigerated storage cabinets, blast cabinets, condensing units and process chillers requires manufacturers to decrease the energy consumption of their products by establishing minimum energy efficiency standards. Copeland refrigeration units are prepared and optimized to meet the requirements of the Ecodesign Directive. The integrated variable speed fan and condenser reduce the noise level and energy consumption significantly. This, combined with Copeland scroll technology, allows for high-efficiency operation.

For the rated cooling capacity, rated power input and rated COP value please refer to Copeland Select software available at www.copeland.com/en-gb/tools-resources.

These guidelines meet the requirements of Regulation 2015/1095, Annex V, section 2(a), with regard to product information, namely:

- (v) ➔ See chapter 2.6 "Application range"
- (vi) ➔ See chapters 5.3 "Condenser fins" and 5.5 "Routine leak testing"
- (vii) ➔ See chapters 2.10 "Main control & safety features" and 4.2 "Charging procedure"
- (viii) ➔ See chapter 7 "Dismantling & disposal"

2.3 Main product features & dimensions

Copeland ZX Small outdoor refrigeration units are released for multiple refrigerants. They are available in one cabinet size and are equipped with one fan. They are designed for medium- and low-temperature refrigeration applications.

Unit	Refrigerant type	Displacement @ 50 Hz (m^3/h)	Cooling capacity* (kW)	Nominal power* (kW)	Rated current (A)	PS high side (bar)	PS low side (bar)
ZXME-013E*301	R450A, R513A & R134a	3.73	1.51	0.70	8	27	21.6
ZXME-015E*301		4.39	1.76	0.82	9.4		
ZXME-018E*301		5.04	1.98	0.95	10.7		
ZXME-013E*302	R404A, R407A, R407F, R448A & R449A	3.73	2.00	1.06	8	31	21.6
ZXME-015E*302		4.39	2.35	1.23	9.4		
ZXME-018E*302		5.04	2.62	1.46	10.7		
ZXLE-018E*302	R448A & R449A	5.93	1.59	1.65	11.5	28.8	21
ZXLE-023E*302		6.73	1.75	1.77	11.4		
ZXLE-028E*302		7.99	2.00	2.06	11.8		

** Cooling capacity at T_{amb} 32 °C, T_{evap} -10 °C dew point for ZXME and -35 °C midpoint for ZXLE models, suction temperature 20 °C, with R513A for BOM 301 units and R448A for BOM 302 units.*

Table 1: ZX Small refrigeration unit technical data

Unit	Outer dimensions length / width / height with closed cover (mm)	Weight (kg)	Liquid receiver size (litres)	Sound level (dB(A)) @ 50 Hz
ZXME-013E	900 / 350 / 605	56	1.8	37
ZXME-015E				37
ZXME-018E				38
ZXLE-018E		54		37
ZXLE-023E				37
ZXLE-028E				38

Table 2: ZX Small refrigeration unit features

The drawings hereafter show the overall physical dimensions of the Copeland ZX Small refrigeration units in millimetres:

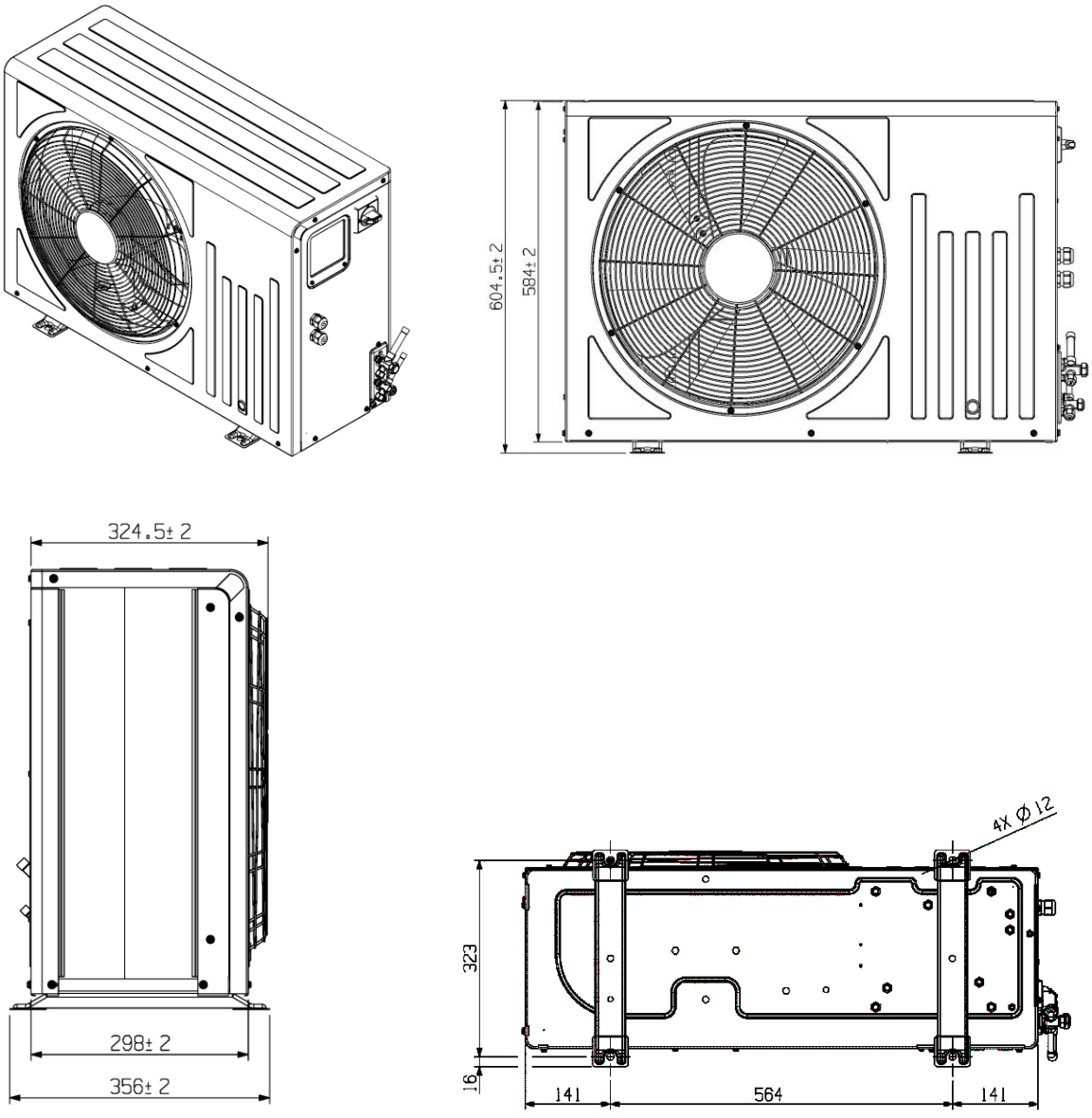

Figure 1: Dimensions of ZX Small refrigeration units (all models)

2.4 Product nameplate

The refrigeration unit nameplate shows model designation and serial number, as well as locked rotor amps, rated current, safety pressures and weight.

The compressor has its own nameplate with all electrical characteristics.

2.5 Nomenclature

The model designation contains the following technical information about the refrigeration unit:

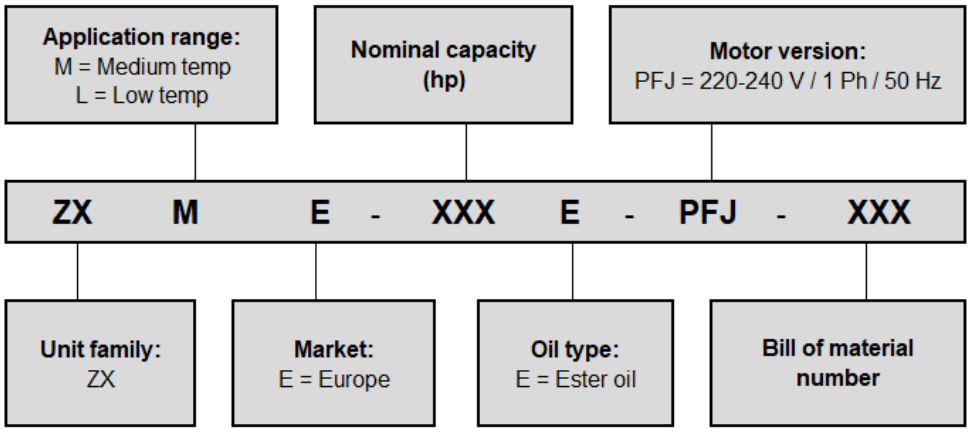

Figure 2: Nomenclature ZX Small units

2.6 Application range

2.6.1 Qualified refrigerants and oils

Qualified refrigerants	R450A, R513A & R134a	R404A, R407A, R407F, R448A & R449A	R448A & R449A
Units	ZXME-013E*301 ZXME-015E*301 ZXME-018E*301	ZXME-013E*302 ZXME-015E*302 ZXME-018E*302	ZXLE-018E*302 ZXLE-023E*302 ZXLE-028E*302
Qualified servicing oils	Emkarate RL 32 3MAF Mobil EAL Arctic 22CC		
Oil charge (litres)	0.74		

Table 3: Qualified refrigerants and oils

2.6.2 Application limits

For application limits, please refer to the compressor application envelopes which can be found in Copeland Select software, available at www.copeland.com/en-gb/tools-resources.

Copeland ZX Small refrigeration units can be used at ambient temperatures from -15 to +43 °C. For lower ambient temperatures please contact your local Application Engineering representative.

2.7 BOM variations

The BOM (bill of material) number at the end of the unit designation indicates the different unit layouts and details. The units covered in these guidelines are available in the following BOM versions:

Unit BOM	Family	Introduction date	Controller	Suction accumulator	Compressor BOM	Medium or low pressure refrigerant
301	ZXME	03/2019	No	No	524	Low
302	ZXME	03/2019	No	No	524	Medium
302	ZXLE	01/2021	No	No	618	Medium

Table 4: BOM variations

2.8 P&I Diagrams

2.8.1 ZXME Small units

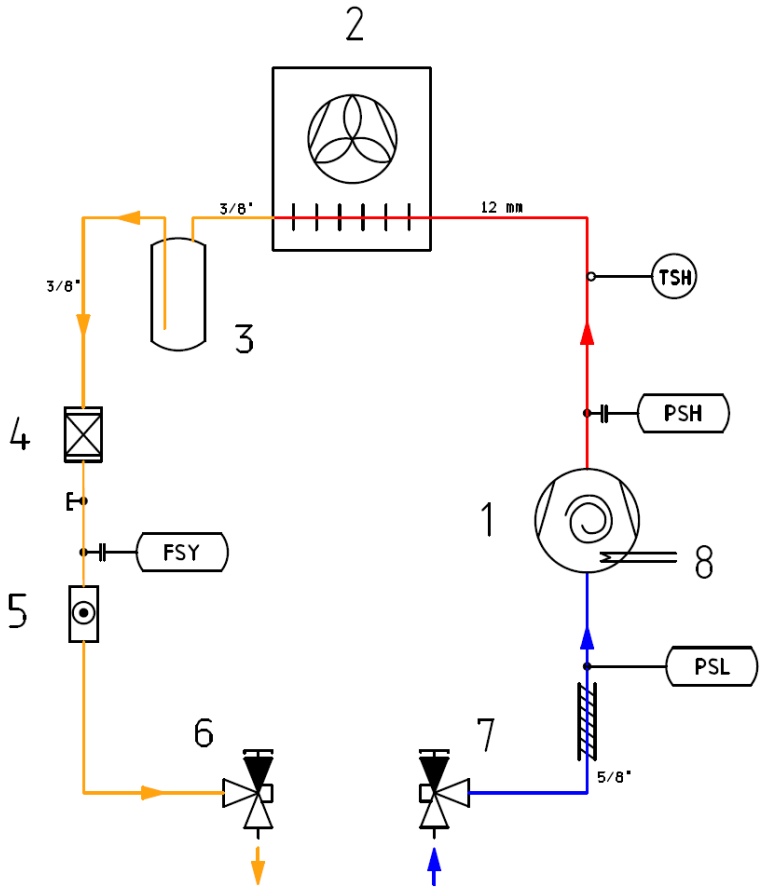

Figure 3: P&I diagram for ZXME Small units

Position	Description
1	Scroll compressor
2	Condenser
3	Liquid receiver
4	Filter-dryer
5	Sight glass
6	Service valve liquid line
7	Service valve suction line
8	Crankcase heater
TSH	Discharge line thermostat
PSH	High-pressure limiter
PSL	Low-pressure limiter
FSY	Fan speed controller

Table 5: Legend of the P&I diagram for ZXME Small units

2.8.2 ZXLE Small units

IMPORTANT
Absence of insulation on the liquid line in ZXLE units! Air moisture condensation and lack of performance! Moisture will condensate on the liquid line and cause water droplets. The liquid line can pick up additional heat from the ambient which will adversely affect the subcooling desirable for the liquid refrigerant before it enters the expansion valve. Both the suction and liquid interconnecting piping between the unit and the evaporator should be insulated to avoid condensation.

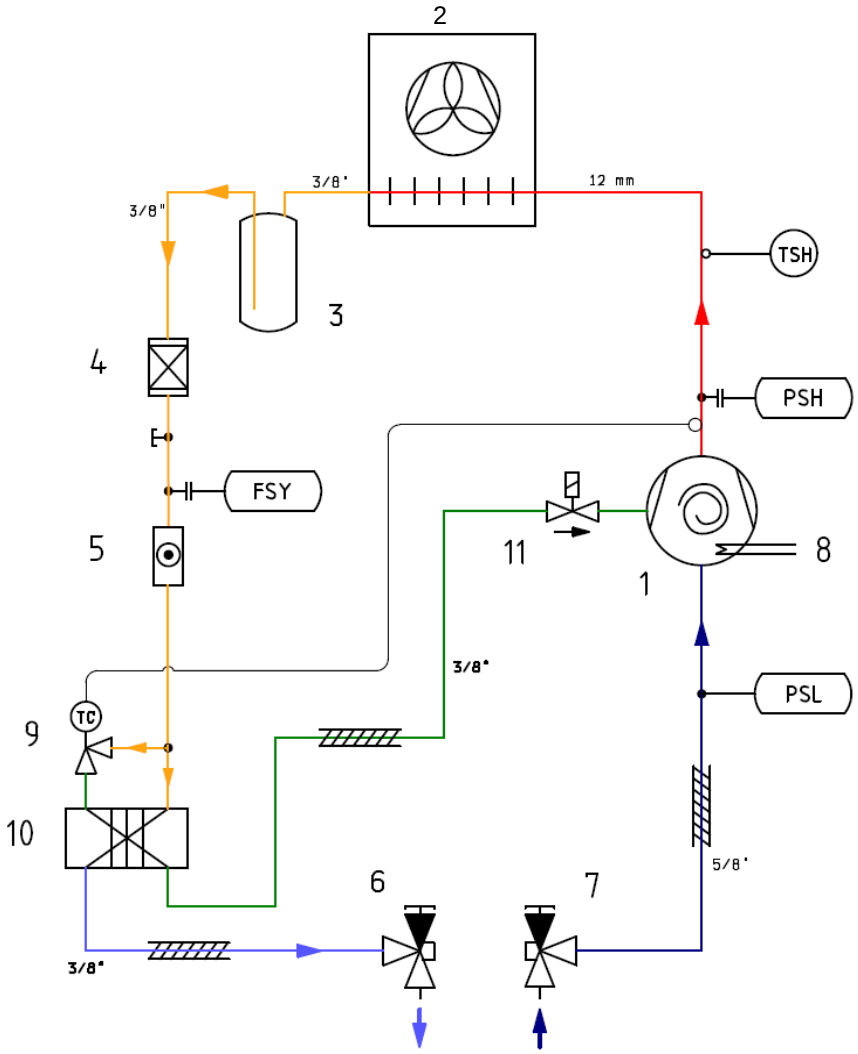

Figure 4: P&I diagram for ZXLE Small units

Position	Description	Position	Description
1	Scroll compressor	9	Liquid injection valve
2	Condenser	10	Plate heat exchanger
3	Liquid receiver	11	Solenoid valve
4	Filter-dryer	TSH	Discharge line thermostat
5	Sight glass	PSH	High-pressure limiter
6	Service valve liquid line	PSL	Low-pressure limiter
7	Service valve suction line	FSY	Fan speed controller
8	Crankcase heater		

Table 6: Legend of the P&I diagram for ZXLE Small units

2.9 Main components description

2.9.1 Compressor

Unit model	Compressor model
ZXME-013E	ZS09KAE-PFJ
ZXME-015E	ZS11KAE-PFJ
ZXME-018E	ZS13KAE-PFJ
ZXLE-018E	ZF06KAE-PFJ
ZXLE-023E	ZF07KAE-PFJ
ZXLE-028E	ZF09KAE-PFJ

Table 7: Compressor models cross reference

2.9.2 Condenser fan

The condenser in the ZX Small refrigeration unit is equipped with a single-phase fan.

Unit	Number of fans	Fan speed	Diameter	Voltage	Power input
ZXME-013E	1	900 rpm	450 mm	220-240 V 1 Ph 50 Hz	106 W
ZXME-015E					
ZXME-018E					
ZXLE-018E					
ZXLE-023E					
ZXLE-028E					

Table 8: Condenser fan technical data

2.9.3 Housing

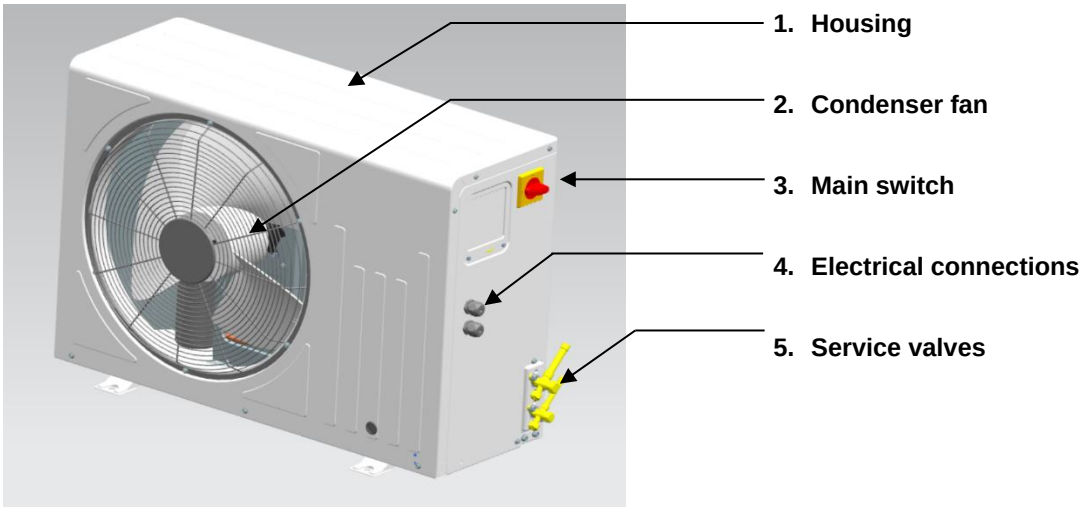

Figure 5: ZX Small unit housing

The housing is designed to withstand a 300-hour salt spray test according to ASTM B-117, ASTM-1654 and ČSN EN ISO 9227.

NOTE: **For detailed information about unit components and spare parts, please refer to the compressor application guidelines and to the Copeland Spare Parts & Accessory Catalogue available at www.copeland.com/en-gb/tools-resources.**

2.10 Main control & safety features

Copeland ZX Small refrigeration units feature a whole range of control and safety components.

2.10.1 Suction pressure control

The unit is switched on and off by means of a PS1 low-pressure switch.

Caution: The unit does not have any cycling protection. The adjustment of the low-pressure switch must be done in such a way that the unit will not switch on and off more than 10 times per hour during normal operation.

2.10.2 Motor current overload protection

No protection is installed in the unit. The installer has to choose an external current protection device for the compressor motor based on motor characteristics and data.

2.10.3 Fixed high-pressure switch PS4

This is a non-adjustable protection device designed to prevent the compressor from operating outside of its safe high-pressure range.

- ZXME with BOM 301: Cut-out 26 bar, cut-in 20 bar
- ZXME with BOM 302 & ZXLE: Cut-out 28 bar, cut-in 21 bar

The compressor is switched on automatically when the pressure falls below the cut-in value.

2.10.4 Adjustable low-pressure switch PS1

This device protects the system against low pressure operation. It must be adjusted depending on running conditions and potential special requirements. The compressor envelopes published in Select must be respected at all times.

2.10.5 Fan speed controller

An electronic fan speed controller is part of the standard scope of delivery of the ZX Small unit. It controls the speed of the fans based on condenser pressure. The controller operates with single-phase motors. The electrical connection is made in the terminal box of the refrigeration unit and the controller is mounted on the liquid valve with a Schraeder fitting.

Two different fan speed controllers are used depending on the refrigerant:

- FSY-41 on units with BOM 301
  - for low pressure refrigerants: R450A, R513A & R134a
- FSY-42 on units with BOM 302
  - for medium pressure refrigerants: R404A, R407A, R407F, R448A & R449A

2.10.6 Crankcase heater

A crankcase heater is provided with the ZX Small refrigeration unit. The crankcase heater is automatically activated by reverse contact when the compressor is not running.

2.10.7 Liquid line assembly

The liquid line assembly includes a filter-dryer and a sight glass/moisture indicator.

2.10.8 Room thermostat

A dedicated electrical connection is pre-wired for operation with a room thermostat. The jumper must be removed to activate the room thermostat – see wiring diagrams in **Appendix 1**.

3 Installation

WARNING
High pressure! Injury to skin and eyes possible! Be careful when opening connections on a pressurized item.

Copeland ZX Small refrigeration units are delivered with a holding charge of dry air at 1.68 bar.

The refrigeration unit should be located in a place such that any dirt, dust, plastic bags, leaves or papers are prevented from covering the condenser and its fins.

The unit must be installed without restricting the airflow.

A clogged condenser will increase the condensing temperature, thus reduce the cooling capacity, and lead to a high-pressure switch tripping. Clean the condenser fins on a regular basis.

3.1 Refrigeration unit handling

3.1.1 Transport and storage

WARNING
Risk of collapse! Personal injuries! Move units only with appropriate handling equipment according to weight. Keep in the upright position. Respect stacking loads according to **Figure 6**. Do not stack anything on top of the unit packaging. Keep the packaging dry at all times.
Never lift or move the units with the housing removed; all the panels should be in place and properly tightened. Do not remove the pallet until the unit has reached its final destination.



Respect the maximum number of identical packages which may be stacked on one another, where "n" is the limiting number:

- **Transport: n = 1**
- **Storage: n = 1**

Figure 6: Maximum stacking loads for transport and storage

3.1.2 Weights

Unit	Net weight (kg)
ZXME-013E	56
ZXME-015E	
ZXME-018E	
ZXLE-018E	54
ZXLE-023E	
ZXLE-028E	

Table 9: Weights

3.2 Refrigeration piping connections

3.2.1 Refrigeration piping installation



WARNING
High pressure! Risk of personal injury! The units are pressurized with dry air. Be careful when opening connections on a pressurized item.

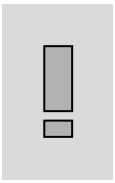

IMPORTANT
Tubing quality! Installation contamination! All interconnecting piping should be of refrigeration grade, clean, dehydrated and must remain capped at both ends until installation. Even during installation, if the system is left for any reasonable period of time, eg, 2 hours, pipes should be re-capped to prevent moisture and contaminant from entering the system.

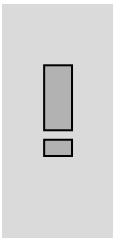

IMPORTANT
Connection sizes! Unsuitable refrigerant flow rate! Do not assume that the service connection sizes on the unit (at the service valves) are in fact the correct size to run your interconnecting refrigeration pipes. The service valve sizes have been selected for convenience of installation and in some cases (larger units) these may be considered too small. However, for the very short pipe run within our units these service connection sizes are adequate. All interconnecting piping should be sized to satisfy the duty required.

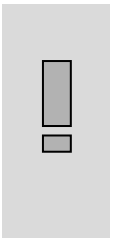

IMPORTANT
Absence of insulation on the liquid line in ZXLE units! Air moisture condensation and lack of performance! Moisture will condensate on the liquid line and cause water droplets. The liquid line can pick up additional heat from the ambient which will adversely affect the subcooling desirable for the liquid refrigerant before it enters the expansion valve. Both the suction and liquid interconnecting piping between the unit and the evaporator should be insulated to avoid condensation.

The piping should be sized to ensure optimum performance and good oil return. The sizing must also take into account the full capacity range through which a particular unit will need to operate.

Pipe runs should be kept as short as possible, using the minimum number of directional changes. Use large radius bends and avoid trapping of oil and refrigerant. This is particularly important for the suction line. The suction line should ideally slope gently towards the unit. Recommended slope is 1/200 to 1/250. Upper and lower oil traps, double risers and reduced pipe diameters may be required for suction lines where long vertical risers cannot be avoided.

All pipes should be adequately supported to prevent sagging which can create oil traps. The recommended pipe clamp support distances are shown in **Table 10** below:

Tube size	Max distance between 2 clamp supports
1/2" (12.7 mm)	1.20 m
5/8" (16.0 mm)	1.50 m
7/8" (22.0 mm)	1.85 m
1 1/8" (28.5 mm)	2.20 m

Table 10: Maximum distance between 2 clamp supports

***NOTE:* It is strongly recommended to insulate both the suction and liquid interconnecting piping between the ZXLE unit and the evaporator.**

3.2.2 Brazing recommendations

CAUTION
Blockage! Compressor breakdown! Maintain a flow of oxygen-free nitrogen through the system at very low pressure during brazing. Nitrogen displaces the air and prevents the formation of copper oxides in the system. If allowed to form, the copper oxide material can later be swept through the system and block screens such as those protecting capillary tubes, thermal expansion valves, and accumulator oil return holes.
Contamination or moisture! Bearing failure! Do not remove the plugs until the compressor is set into the unit. This minimises any entry of contaminants and moisture.

- Remove the discharge connection cap.
- Remove the suction connection cap.
- Open both valves mid-way. Care should be taken to avoid the holding charge releasing too quickly.
- Be sure tube fitting inner surface and tube outer surface are clean prior to assembly.
- Both tubes are extended from the refrigeration unit housing, therefore we recommend isolating the housing by using a wet cloth on the copper tubing.
- Recommended brazing materials: a copper/phosphorous or copper/phosphorous/silver alloy rod should be used for joining copper to copper whereas to join dissimilar or ferric metals a silver alloy rod either flux coated or with a separate flux would be used.
- Use a double-tipped torch.

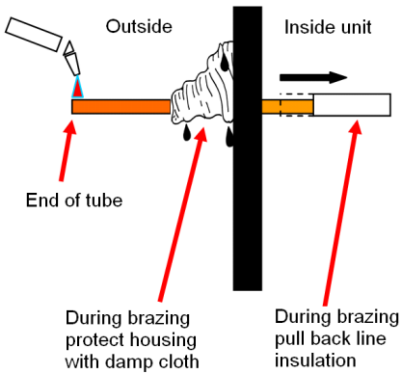

Figure 7: Brazing – Sectional view

3.2.3 Brazing procedure

For the brazing of the tubes, please refer to **Figure 8** and procedure hereunder:

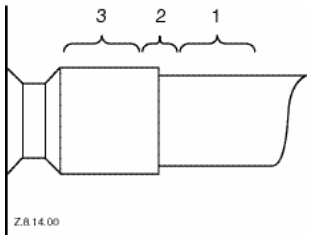

Figure 8: Suction tube brazing areas

- Fit the copper tube into the unit tube.
- Heat area 1. As the tube approaches brazing temperature,
- heat area 2 until braze temperature is attained. It is necessary to heat the tube evenly. Move the torch up and down and rotating around the tube.
- Add braze material to the joint while moving the torch around the joint to flow braze material around the circumference.
- Then heat area 3. This will draw the brazing material down into the joint.

***NOTE:* The time spent heating area 3 should be minimal. As with any brazed joint, overheating may be detrimental to the final result.**

To disconnect:

- Heat joint areas 2 and 3 slowly and uniformly until solder softens and tube can be pulled out of the fitting.

To reconnect:

- See procedure above.

3.3 Electrical connection

WARNING
Earth leakage current! Electrical shock hazard! The power supply of these units must include an RCD protection with a sensitivity of 30 mA.

IMPORTANT
The front cover of the electrical box is protected by a ground connection. Open the electrical box cover carefully to avoid pulling out the ground wire.

3.3.1 Power supply connections

The electrical connection of the refrigeration unit to the power supply must be made by qualified technicians in compliance with valid electrical standards, for instance DIN EN 60204-1. Also, the voltage drops and temperature on line must be considered for cable selection.

Copeland ZX Small units are designed for 220-240 V / 1 Ph / 50 Hz power supply. A voltage tolerance of ± 10 % is acceptable.

The circuit breaker must be switched off before opening the front panel.

Before commissioning the unit, ensure that the neutral "N" and ground protection "PE" wires are connected to the main switch.

All accessible metallic parts or objects within 3 metres of the refrigeration unit, eg, metal pipes, fence, ladders, railings etc... must be grounded with a dedicated grounding connection. A separate ground connection is provided on the baseplate of the unit.



Figure 9: Additional ground connection on the unit baseplate

After commissioning, make sure to reconnect the ground wire to the front cover.

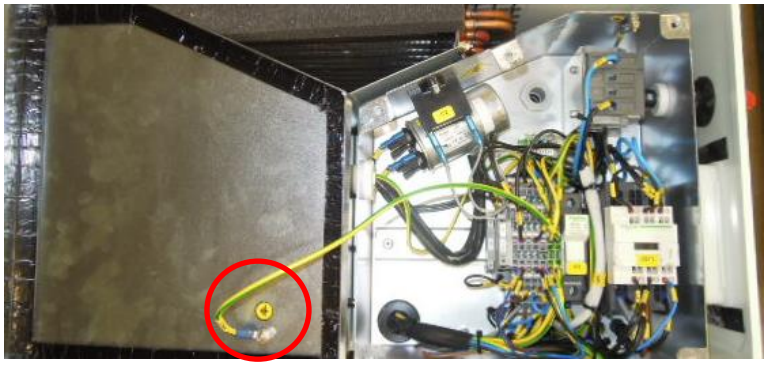

Figure 10: Ground connection on electrical box cover



Figure 11: Ground connection details

3.3.2 Maximum operating currents for cable selection

Unit	Locked rotor current	Rated current
ZXME-013E	45 A	8 A
ZXME-015E	45 A	9.4 A
ZXME-018E	54 A	10.7 A
ZXLE-018E	61 A	11.5 A
ZXLE-023E	79 A	11.4 A
ZXLE-028E	76.7 A	11.8 A

Table 11: Unit maximum rated currents for cable selection

3.3.3 Electrical protection standard (protection class)

The protection class of the Copeland ZX Small unit is IPX4.

3.3.4 Main fuses

WARNING
Main switch "On"! Electrical shock hazard! Before changing the fuses, turn the isolating switch off to de-energize the unit.

Circuit	Fuse size	Fuse range	Ident number
Control circuit	Fuse 5 x 20	3.15 A	3233538
Main power supply	Fuse 10 x 38	12 A	3200810

Table 12: Main fuses sizes and ranges

3.3.5 Time relay on ZXLE units

Low temperature ZXLE units are equipped with a multifunction time relay preadjusted as "Delay Off" mode C for 6 minutes.

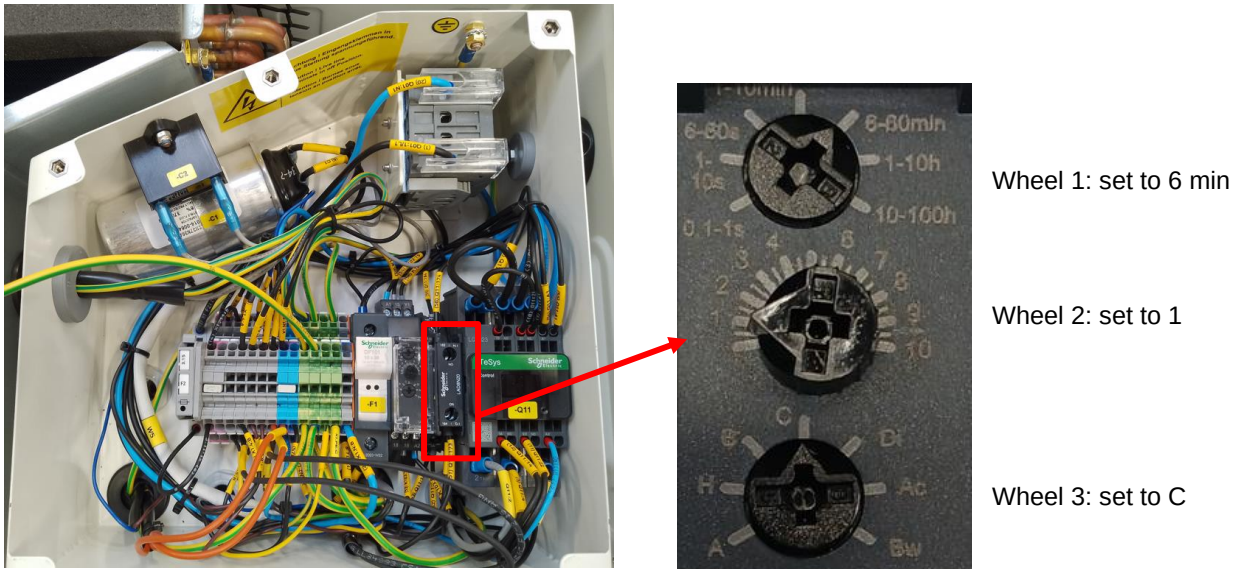

Figure 12: ZXLE terminal box with time relay

When the compressor stops due to low pressure, it will be allowed to re-start after the delay time adjusted on the time relay has elapsed (6 minutes by default).

This time delay can be adjusted according to application.

3.4 Location & fixings

IMPORTANT
Dust and dirt contamination! Unit lifetime reduction! The unit should always be installed in a location where clean airflow is ensured. External fouling of the condenser fins leads to high condensing temperatures and will reduce the lifetime of the unit.

It is required to maintain a clearance of 300 mm between the wall (or the next unit) and the unit left and rear panels while a clearance of 500 mm must be maintained from the unit right, top and front panels (seen facing the front of the unit) – see **Figure 13** hereunder. Both service access and airflow have been considered in making these recommendations.

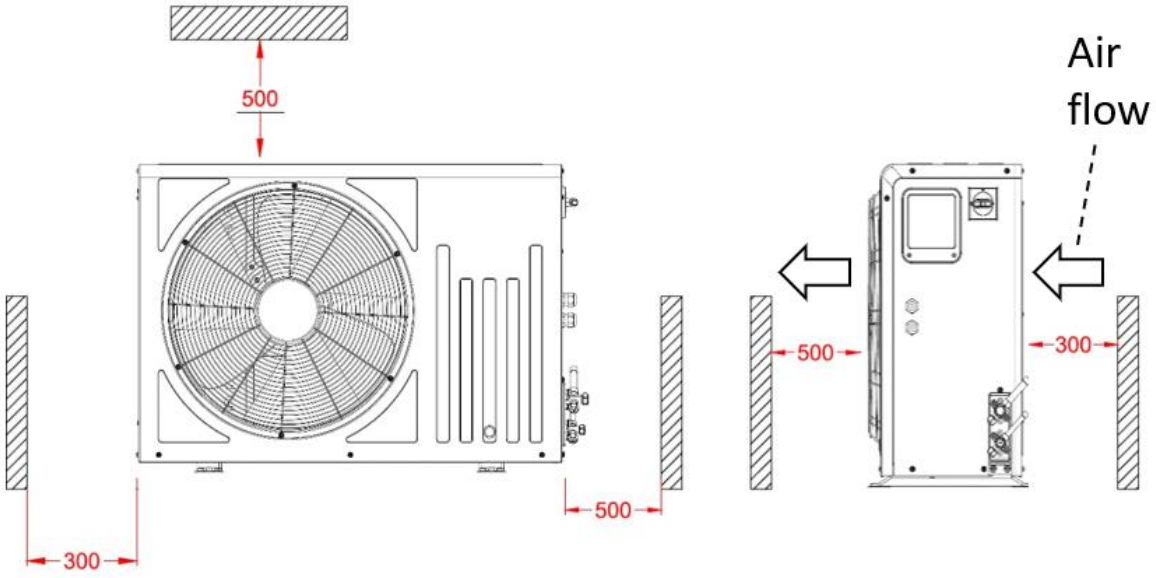

Figure 13: Distances required for unit installation (in mm)

Where multiple units are to be installed in the same location, the contractor needs to consider each individual case carefully. There can be many variations of unit quantities and available space and it is not the intention of this manual to go over these. However, as a rule, air by-pass around each condenser and between the units should always be avoided.

Ideally, the unit should be mounted level on a solid concrete slab with anti-vibration pads between unit feet and concrete. However, the ZX Small refrigeration unit has also been designed for wall mounting on suitable brackets. In this case it is equally important that the dimensional guidelines given above are followed and that additional consideration is given for possible air recycling if units are installed one above the other. Wall mounting brackets are not part of the standard delivery.

Another factor to consider in finding a good installation site is the direction of the prevailing wind. For example, if the air leaving the condenser faces the prevailing wind, the airflow through the condenser can be impeded, causing high condensing temperatures and ultimately resulting in reducing the unit lifetime. A baffle is a remedy for this situation.

4 Start-up & operation

Before commissioning, ensure that all valves on the refrigeration unit are fully opened.

4.1 Evacuation

CAUTION
System pressure below atmospheric pressure! Compressor damage! Never energize the unit without minimum refrigerant charge in the system. There is a risk of malfunction of the unit in deep vacuum operation which can cause compressor damage.

IMPORTANT
The evacuation procedure is based upon achieving an actual system vacuum standard and is NOT TIME DEPENDENT! The installation has to be evacuated with a vacuum pump before commissioning. Proper evacuation reduces residual moisture to 50 ppm. The installation of adequately sized access valves at the furthest point from the compressor in the suction and liquid lines is advisable. The system must be evacuated down to less than 3 mbar. If required break the vacuum with dry nitrogen. Pressure must be measured using a vacuum pressure gauge on the access valves and not on the vacuum pump. This serves to avoid incorrect measurements resulting from the pressure gradient along the connecting lines to the pump.

4.2 Charging procedure

4.2.1 Refrigerant charging procedure

CAUTION
Service valve closed! Compressor damage! Do not charge the unit with vapour (gas). The suction service valve must not be fully closed at any time when the compressor is running. To do so would cause damage to the compressor in the same manner as explained above. This valve is provided for ease of connection and for the fitting of service gauges without removing the unit panel.

IMPORTANT
Inadequate charge! Overheating! The scroll compressor design requires system charging as quickly as possible with liquid refrigerant into the liquid line. This will avoid running the compressor under conditions whereby insufficient suction gas is available to cool not only the motor but also the scrolls. Temperature builds up very quickly in the scrolls if this is not done.

IMPORTANT
Absence of insulation on the liquid line in ZXLE units! Air moisture condensation and lack of performance! Moisture will condensate on the liquid line and cause water droplets. The liquid line can pick up additional heat from the ambient which will adversely affect the subcooling desirable for the liquid refrigerant before it enters the expansion valve. Both the suction and liquid interconnecting piping between the unit and the evaporator should be insulated to avoid condensation.

Pre-charging must be carried out with liquid refrigerant through the service valve on the liquid line. It is advisable to pre-fill the suction side with a partial charge to avoid vacuum operation. Further charging can be carried out by carefully filling refrigerant through the suction line while simultaneously checking the sight glass. The charge is sufficient if no more bubbles appear in the sight glass.

Recommendation is to break vacuum in the system with partial charge of refrigerant, then start the system.

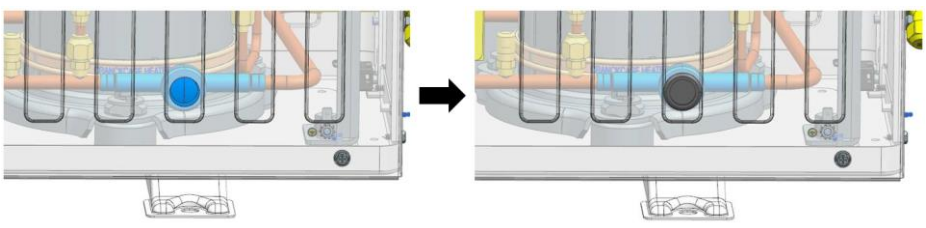

Figure 14: Sight glass & rubber cap

After checking the refrigerant quantity in the sight glass, put the rubber cap back into place as shown in **Figure 14**.

For charge adjustment it is recommended to check the liquid sight glass just before the expansion valve.

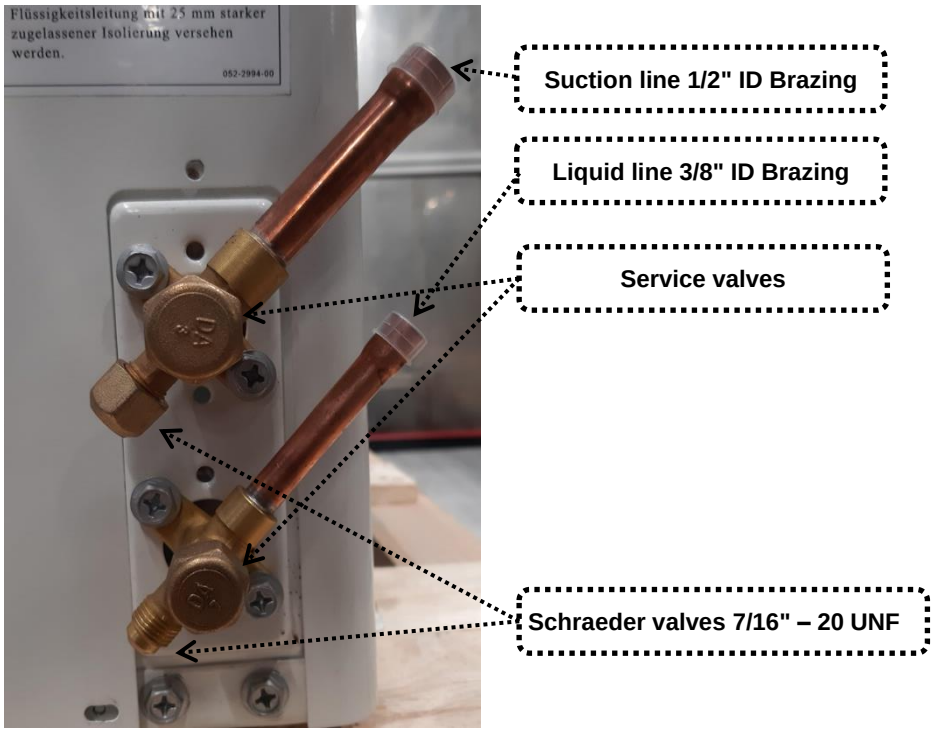

Figure 15: Suction line, liquid line, service valves and Schraeder valves for refrigerant/oil charging

***NOTE:* Once charging is done, the type and amount of refrigerant used must be clearly noted on the unit nameplate.**

***NOTE:* In order to meet the requirements of the Ecodesign Directive 2009/125/EC with regard to efficient system operation, ensure the refrigerant charge is sufficient.**

4.2.2 Oil charging procedure

Copeland ZX Small refrigeration units are supplied with a compressor oil charge only. After commissioning, the oil level should be checked and topped up as necessary.

As mentioned in **paragraph 2.6.1 "Qualified refrigerants and oils"**, Copeland recommends using one of the following oil types:

- Emkarate RL 32 3MAF
- Mobil EAL Arctic 22 CC

Charging is done through the Schraeder valve located on the suction line valve – see **Figure 15** above.

***NOTE:* The oil level should be approximately halfway up the sight glass.**

4.3 Rotation direction of scroll compressors

Scroll compressors, like several other types of compressors, will only compress in one rotational direction. Direction of rotation is not an issue with single-phase compressors since they will always start and run in the right direction.

4.4 Maximum compressor cycle

Maximum permitted starts per hour: 10.

4.5 Checks before starting & during operation

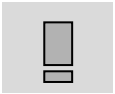

IMPORTANT
Liquid valves not fully opened! Liquid trap! The valves on the liquid line should be fully open, in order to prevent liquid trapping.

Before a system runs for the first time:

- Check that the valves on the liquid line are fully open.
- Carry out visual inspection.
- Perform control tests to ensure all controls operate correctly, including any manual backup system (if applied).
- Check also the following:
  - ✓ Documentation for the system and its marking, especially pressure equipment.
  - ✓ Installation of safety devices.
  - ✓ Compressor oil level.
  - ✓ Pressure test records.
  - ✓ All valves open/closed as required for operation.

After start-up and when operation conditions have stabilised:

- It is recommended to check the oil level in the compressors and to add oil if necessary, to ensure a sufficient oil level (halfway up the sight glass).
- The following should also be checked:
  - ✓ Fan rotation.
  - ✓ Refrigerant charge.
  - ✓ Suction superheat.

4.6 Restart after unexpected stop

In case of unexpected power interruption, the unit will restart automatically as soon as power is supplied again, and suction pressure is above cut-in value.

5 Maintenance & repair

5.1 Replacing a compressor



CAUTION
Inadequate lubrication! Bearing destruction! If the system contains one, exchange the accumulator after replacing a compressor with a burned-out motor. The accumulator oil return orifice or screen may be plugged with debris or may become plugged. This will result in starvation of oil to the new compressor and a second failure.

In case of motor burnout, most of the contaminated oil will be removed with the compressor. The rest of the oil is cleaned through the use of suction and liquid line filter-dryers. A 100 % activated alumina filter-dryer is recommended but must be removed after 72 hours.

It is highly recommended to replace the suction accumulator if the system contains one. This is because the accumulator oil return orifice or screen may be plugged with debris or may become plugged shortly after a compressor failure. This will result in starvation of oil to the replacement compressor and a second failure.

When a compressor is exchanged in the field, it is possible that a large portion of the oil remains in the system. While this may not affect the reliability of the replacement compressor, the extra oil will add to rotor drag and increase power usage.

- De-energize the refrigeration unit before any intervention.
- Close valves to isolate the unit from the system.
- Recover the refrigerant from the unit and make sure that the compressor is not under pressure.
- Release the compressor mounting parts then lift the compressor and replace it with the new one.

NOTE: **For more information about unit components and spare parts, please refer to the compressor application guidelines and to the Copeland Spare Parts software available at www.copeland.com/en-gb/tools-resources.**

5.2 Safety devices

During regular maintenance, all mechanical safety devices such as high- and low-pressure switches must be checked for proper functioning and triggering at adjusted setpoints.

In case of high- and/or low-pressure switch replacement, the triggering points must be checked before putting the system back in operation.

5.3 Condenser fins



WARNING
Uncovered rotating parts! Personal injuries! Exercise great caution during maintenance when the housing is removed: the fan can start unexpectedly and cause personal injuries or damage to the maintenance tools.



CAUTION
Acid cleaning! Corrosion of condenser fins! Do not use acidic solutions to clean the coil. After cleaning, the fins should be brushed lightly with a proper fin comb.

Condenser fins become dirty over time as ambient air is induced to the condenser. Dirty coil surfaces result in high condensing temperatures and poor unit performance. Regular cleaning is recommended, the frequency of doing so being dependent on the installation and the surrounding environment. As a general guide it is advisable to do this at least once every 6 months.

As a general rule and for a clean environment we recommend that the fins be cleaned with liquid detergent diluted with clean water. The ZX Small unit has a well-designed chassis with falling levels towards a large drainage hole and provided the unit is installed level, any cleaning solution should be able to drain away. A light brush downward (in the direction of the fins) should be done before washing to remove heavy deposits.

NOTE: **In order to meet the requirements of the Ecodesign Directive 2009/125/EC with regard to efficient system operation, ensure the heat exchangers remain clean at all times.**

5.4 Electrical connections



WARNING
Isolating switch "On"! Danger of electric shock! Before undertaking any task on electrical equipment, turn off the main power supply to de-energise the unit.

All refrigeration units will generate some degree of vibration. Copeland ZX Small units are no exception. However, the vibration level from the compliant scroll technology is less severe than in units using reciprocating compressor technology. Thanks to this reduced vibration, ZX Small refrigeration units can be mounted on simple, less expensive rubber mounting pads.

Nevertheless, over time, due to these slight vibrations and to temperature fluctuations within the unit housing, electrical terminations might become loose. The components most likely to be affected are the main terminal strip and the compressor contactor. It is suggested to check the main electrical terminations for tightness and to carry out a visual inspection of the low voltage crimped terminals at least once every 6 months.

5.5 Routine leak testing

All joints inside the system should be leak-tested according to EN 378-4 as part of a regular maintenance schedule.

***NOTE:* In order to meet the requirements of the Ecodesign Directive 2009/125/EC with regard to efficient system operation, ensure the refrigerant and oil charges are sufficient.**

5.6 Condenser fan & motor

A yearly inspection of these items is recommended. Fastenings can become loose, bearings may wear out and fans may require cleaning of solid deposits that can cause rotational imbalance.

Motors come with lifelong lubrication bearings that do not require lubricating on a routine basis, but just need to be checked for wear.

6 Certification & approval

- Copeland ZX Small refrigeration units comply with the Low Voltage Directive LVD 2014/35/EU. The compliance is verified through harmonized standards:
  - EN 60335-1: Household and similar electrical appliances – Safety, Part 1: General Requirements.
  - EN 60335-2-40: Household and similar electrical appliances – Safety, Part 2-40: Particular requirements for electrical heat pumps, air-conditioners and dehumidifiers.
- Copeland ZX Small refrigeration units comply with the Electromagnetic Compatibility Directive EMC 2014/30/EU. The compliance is verified through harmonized standards:
  - EN 55014-1: Electromagnetic compatibility (EMC) Part 1: Requirements for household appliances, electric tools and similar apparatus, Emission.
  - EN 61000-3-2: Electromagnetic compatibility (EMC) Part 3-2: Limits – Limits for harmonic current emissions (equipment input current ≤ 16 A per phase).
  - EN 61000-3-3: Electromagnetic compatibility (EMC) Part 3-3: Limits – Limitation of voltage changes, voltage fluctuations and flicker in public low-voltage supply systems, for equipment with rated current ≤ 16 A per phase and not subject to conditional connection.
  - EN 61000-6-2: Electromagnetic compatibility (EMC) Part 6-2: Generic standards – Immunity standard for industrial environments.
  - EN 61000-6-3: Electromagnetic compatibility (EMC) Part 6-3: Generic standards – Emission standard for residential, commercial and light-industrial environments.
- The Copeland ZX Small refrigeration units and their piping comply with the Pressure Equipment Directive PED 2014/68/EU. Applied harmonized standard:
  - EN 378-2: Refrigerating systems and heat pumps – Safety and environmental requirements Part 2: Design, construction, testing, marking and documentation.
- The Copeland ZX Small refrigeration units and their associated spare parts and accessories comply with the Directive RoHS 2011/65/EU, (EU) 2015/863 on the Restriction of the use of certain Hazardous Substances in electrical and electronic equipment (recast).
- Conformity Declarations for components are available as far as required.
- The Manufacturer's Declaration of Incorporation has to be respected when incorporating these products into a machine.

7 Dismantling & disposal



Removing oil and refrigerant:

- **Do not disperse in the environment.**
- **Use the correct equipment and method of removal.**
- **Dispose of oil and refrigerant in compliance with national legislation and regulations.**

Dispose of compressor and/or unit in compliance with national legislation and regulations.

Appendix 1: Wiring diagrams – ZX Small units (220-240 V / 1 Ph / 50 Hz)

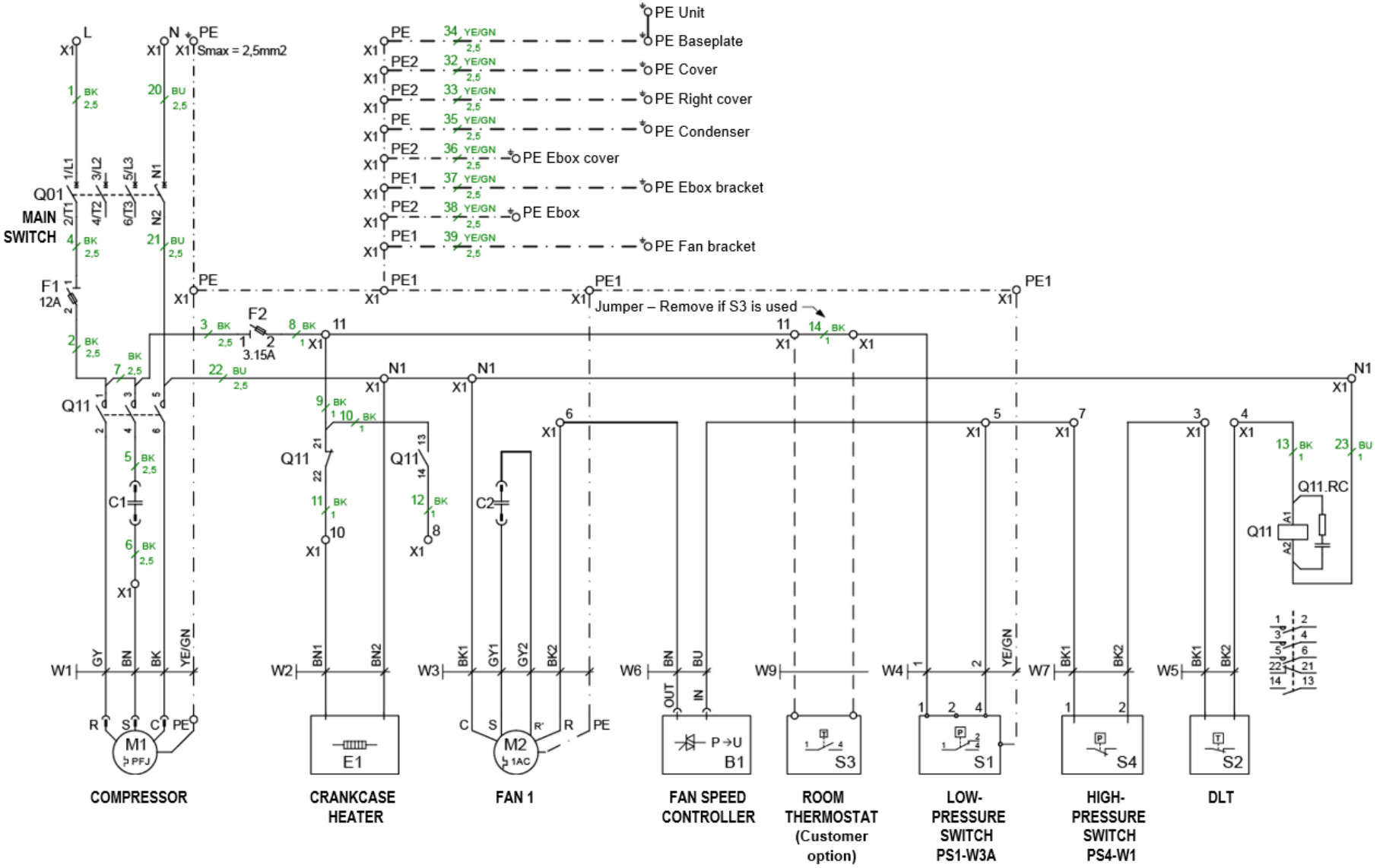

Figure 16: Wiring diagram ZXME units

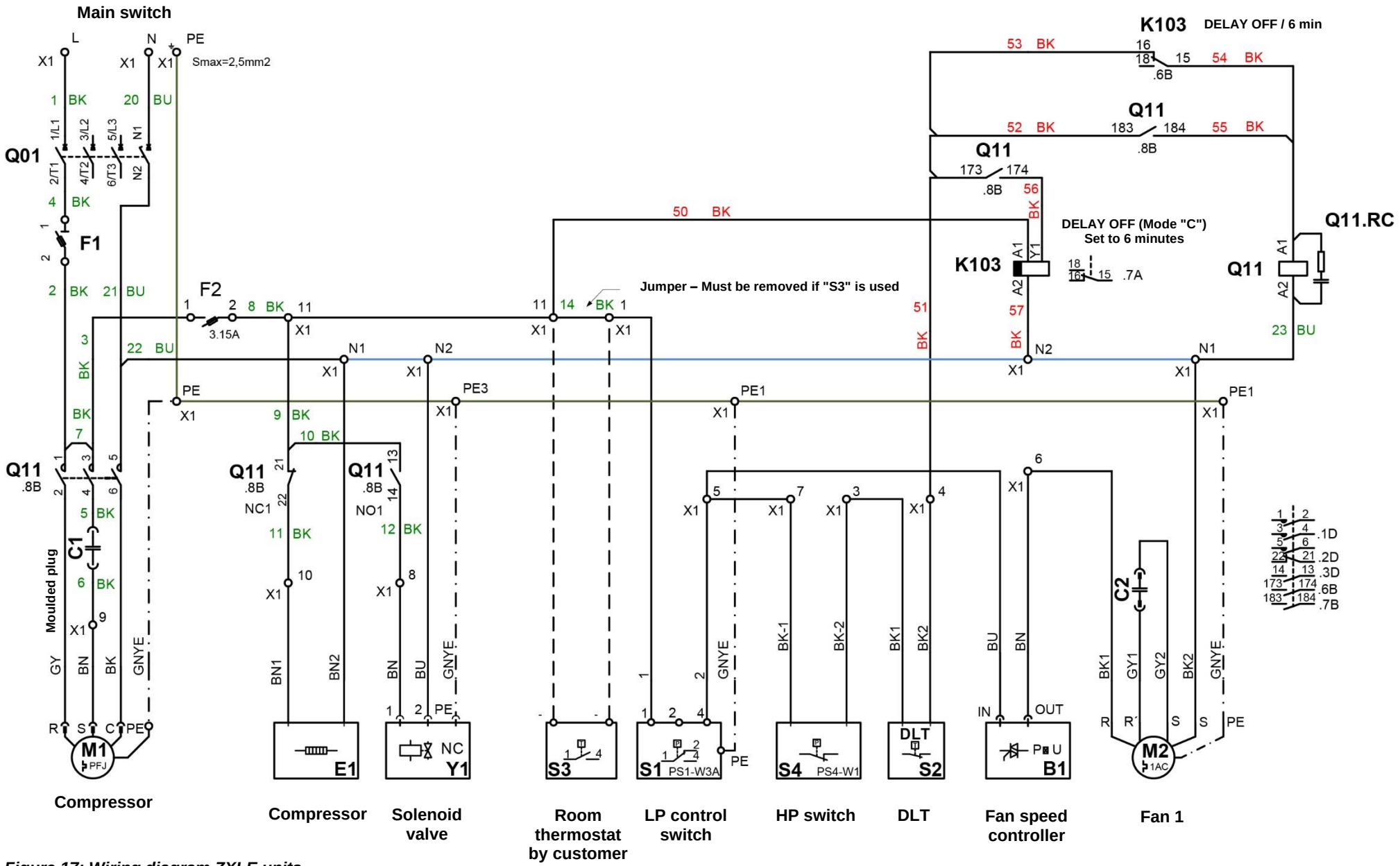

Figure 17: Wiring diagram ZXLE units

Appendix 2: List of tables and figures

Tables

Table 1: ZX Small refrigeration unit technical data 3
Table 2: ZX Small refrigeration unit features 4
Table 3: Qualified refrigerants and oils 5
Table 4: BOM variations 5
Table 5: Legend of the P&I diagram for ZXME Small units 6
Table 6: Legend of the P&I diagram for ZXLE Small units 7
Table 7: Compressor models cross reference 8
Table 8: Condenser fan technical data 8
Table 9: Weights 10
Table 10: Maximum distance between 2 clamp supports 11
Table 11: Unit maximum rated currents for cable selection 14
Table 12: Main fuses sizes and ranges 14

Figures

Figure 1: Dimensions of ZX Small refrigeration units (all models) 4
Figure 2: Nomenclature ZX Small units 5
Figure 3: P&I diagram for ZXME Small units 6
Figure 4: P&I diagram for ZXLE Small units 7
Figure 5: ZX Small unit housing 8
Figure 6: Maximum stacking loads for transport and storage 10
Figure 7: Brazing – Sectional view 12
Figure 8: Suction tube brazing areas 12
Figure 9: Additional ground connection on the unit baseplate 13
Figure 10: Ground connection on electrical box cover 13
Figure 11: Ground connection details 13
Figure 12: ZXLE terminal box with time relay 14
Figure 13: Distances required for unit installation (in mm) 15
Figure 14: Sight glass & rubber cap 16
Figure 15: Suction line, liquid line, service valves and Schraeder valves for refrigerant/oil charging 17
Figure 16: Wiring diagram ZXME units 22
Figure 17: Wiring diagram ZXLE units 23

DISCLAIMER: The Copeland logo is a trademark and service mark of Copeland LP or one of its affiliates. Copeland Europe GmbH shall not be liable for errors in the stated capacities, dimensions, etc., as well as typographic errors. Products, specifications, assumptions, designs and technical data contained in this document are subject to modification by us without prior notice. Illustrations are not binding. ©2024 Copeland LP. All rights reserved.

BENELUX
Josephinastraat 19
NL-6462 EL Kerkrade
Tel: +31 45 535 06 73
Fax: +31 45 535 06 71
benelux.sales@copeland.com

GERMANY, AUSTRIA & SWITZERLAND
Theo-Mack-Str. 3
DE-63477 Maintal
Tel: +49 6109 605 90
cde.sales@copeland.com

FRANCE, GREECE & MAGHREB
8, Allée du Moulin Berger
FR-69134 Ecully Cédex,
Technoparc - CS 90220
Tel: +33 4 78 66 85 70
Fax: +33 4 78 66 85 71
mediterranean.sales@copeland.com

ITALY
Via Ramazzotti, 26
IT-21047 Saronno (VA)
Tel: + 39 02 9713 8060
Fax: +39 02 96 17 88 88
italy.sales@copeland.com

SPAIN & PORTUGAL
C/ Pujades, 51-55 Box 53
ES-08005 Barcelona
Tel: +34 93 412 37 52
iberica.sales@copeland.com

CZECH REPUBLIC
Hajkova 22
CZ - 133 00 Prague
Tel: +420 733 161 651
Fax: +420 271 035 655
Pavel.Sudek@copeland.com

ROMANIA & BULGARIA
Str. Alexandru Vaida Voevod Nr. 53B, Et. 5
400436, Cluj-Napoca, Romania
Tel: +40 364 821 680
ro-bg.sales@copeland.com

ASIA PACIFIC
Suite 2503-8, 25/F., Exchange Tower
33 Wang Chiu Road, Kowloon Bay
Kowloon , Hong Kong
Tel: +852 2866 3108
Fax: +852 2520 6227

UK & IRELAND
Tel: +44 1189 83 80 00
Fax: +44 1189 83 80 01
uk.sales@copeland.com

SWEDEN, DENMARK, NORWAY & FINLAND
Pascalstr. 65
DE-52076 Aachen
Tel: +49 2408 929 0
Fax: +49 2408 929 525
nordic.sales@copeland.com

EASTERN EUROPE & TURKEY
Pascalstr. 65
DE-52076 Aachen
Tel: +49 2408 929 0
Fax: +49 2408 929 525
easterneurope.sales@copeland.com

POLAND
ul. Konstruktorska 13
PL-02673 Warsaw
Tel: +48 22 458 92 05
Fax: +48 22 458 92 55
poland.sales@copeland.com

BALKAN
Selska cesta 93
HR-10 000 Zagreb
Tel: +385 1 560 38 75
Fax: +385 1 560 38 79
balkan.sales@copeland.com

MIDDLE EAST & AFRICA
PO Box 26382
Jebel Ali Free Zone - South, Dubai - UAE
Tel: +971 4 811 81 00
Fax: +971 4 886 54 65
mea.sales@copeland.com

For more details, see copeland.com/en-gb

Copeland Europe GmbH
Pascalstrasse 65 - 52076 Aachen, Germany
Tel. +49 (0) 2408 929 0 - Fax: +49 (0) 2408 929 570 – Internet: copeland.com/en-gb

The Copeland logo is a trademark and service mark of Copeland LP or one of its affiliates. Copeland Europe GmbH shall not be liable for errors in the stated capacities, dimensions, etc., as well as typographic errors. Products, specifications, assumptions, designs and technical data contained in this document are subject to modification by us without prior notice. Illustrations are not binding. ©2024 Copeland LP. All rights reserved.

COPELAND